ELEVATOR CONTROLS

SIMPLE. SOLID. SUPPORTABLE.

6150 WAREHOUSE WAY, SACRAMENTO, CA 95826
PHONE: (800) 829-8106 FAX: (916) 428-1728
E-MAIL: technical.support@elevatorcontrols.com

JOB NAME:

215 PEARL STREET (R1 & R2)

JOB NUMBER:

17-19017

CONTROLLER ID:

A & B

CONTROLLER MODEL:

PIXEL AC VECTOR-GL-L2

TABLE OF CONTENTS

	PAGE NAME:	PAGE DESCRIPTION:	
	QR1	QUICK START REFERENCE: CONSTRUCTION MODE OPERATION	INSTALLATION
	QR2	QUICK REFERENCE: MAIN FRONT CAR OPERATING PANEL WIRING DIAGRAM AND INTERCONNECTIONS TO MAIN CONTROLLER	
	QR3	QUICK REFERENCE: TOP OF CAR ASSEMBLY (TOC) WIRING DIAGRAM AND INTERCONNECTIONS TO MAIN CAR OPERATING PANEL	
	QR4	QUICK REFERENCE: HOISTWAY AND MACHINE ROOM WIRING DIAGRAM	
	QR4b	QUICK REFERENCE: P-HALL NETWORK WIRING DIAGRAM	
CAR A ONLY	QR4Z	QUICK REFERENCE: P-HALL NETWORK WIRING DIAGRAM FOR MULTI-CAR GROUPLESS	
	QR5	LANDA POSITION SYSTEM INSTALLATION INSTRUCTIONS	
	QR6	TOC (TOP OF CAR) BOX MOUNTING INSTRUCTIONS	
	QR7	DRIVE PARAMETER SETTINGS AND BASIC START-UP INSTRUCTIONS	
	1	MAIN LINE INPUT VOLTAGE AND DRIVE INTERFACE	TROUBLESHOOTING
	2	P-PDB BOARD: CONTROLLER POWER, MACHINE BRAKE, EMERGENCY BRAKE INTERFACE	
	3	INSPECTION INPUTS & HOISTWAY SAFETY STRING	
	4	RUN CONTACTORS (MAIN & BRAKE), DOOR LOCKS AND COMMUNICATION PORTS (CAB CAN, SELECTOR & HALL CAN)	
	5	P-MP-IO BOARD: SERIAL FIXTURE DRIVER, FIRE SENSORS, (4) PROGRAMMABLE INPUTS & (4) PROGRAMMABLE OUTPUTS	
	5b	P-CNEX BOARD #1: MAIN CONTROLLER EXPANSION I/O - (16) PROGRAMMABLE INPUTS/OUTPUTS	
	5c	P-CNEX BOARD #2: MAIN CONTROLLER EXPANSION I/O - (16) PROGRAMMABLE INPUTS/OUTPUTS	
CAR A ONLY	5d	P-CNEX BOARD #3: MAIN CONTROLLER EXPANSION I/O - (16) PROGRAMMABLE INPUTS/OUTPUTS	
CAR A ONLY	5Z	P-HNA BOARD(S): MULTI-CAR GROUPLESS DISPATCHER, FIRE SENSORS.	
CAR A ONLY	5Zb	P-CNEX BOARD #1Z: MULTI-CAR GROUPLESS DISPATCHER SYSTEM EXPANSION I/O - (16) PROGRAMMABLE INPUTS/OUTPUTS	
	6	P-TOC BOARD (TOP OF CAR): TRAVELER INTERCONNECTIONS, CAR SAFETY STRING, CARTOP INSPECTION...ETC.	
	6b	P-TOC BOARD (TOP OF CAR): LANDA POSITION SYSTEM, FRONT DOOR INTERFACE & INFRARED DETECTOR	
	7	P-TOC BOARD & TOC BOX TO MAIN FRONT CAR OPERATION PANEL (COP) INTERCONNECTIONS	
	8	P-COP BOARD: MAIN FRONT COP FIXTURE INTERFACE (DOOR BUTTONS, FIRE SERVICE PHASE 2, CAR CALLS, INDEPENDENT SERVICE...ETC.)	
	8b	P-CNEX BOARD #1: MAIN FRONT COP EXPANSION I/O - (16) PROGRAMMABLE INPUTS/OUTPUTS	
CAR A ONLY	8c	P-CNEX BOARD #2: MAIN FRONT COP EXPANSION I/O - (16) PROGRAMMABLE INPUTS/OUTPUTS	
	9	FRONT P-HALL BOARDS (SERIAL HALL SYSTEM): HOISTWAY ACCESS	
CAR A ONLY	9Z	FRONT P-HALL BOARDS (SERIAL HALL SYSTEM): HALL CALLS & FIRE PHASE 1 SW.	
	10	CONTACT COUNT, SCHEMATIC NOMENCLATURE AND PIXEL BOARD TYPES	
	TS	PIXEL MAIN CONTROLLER INTERCONNECTION TERMINAL LABEL ORDER AND TOC BOX INTERCONNECTION TERMINAL LABEL ORDER	

TYPICAL Pixel CONTROLLER INTERCONNECTION OVERVIEW

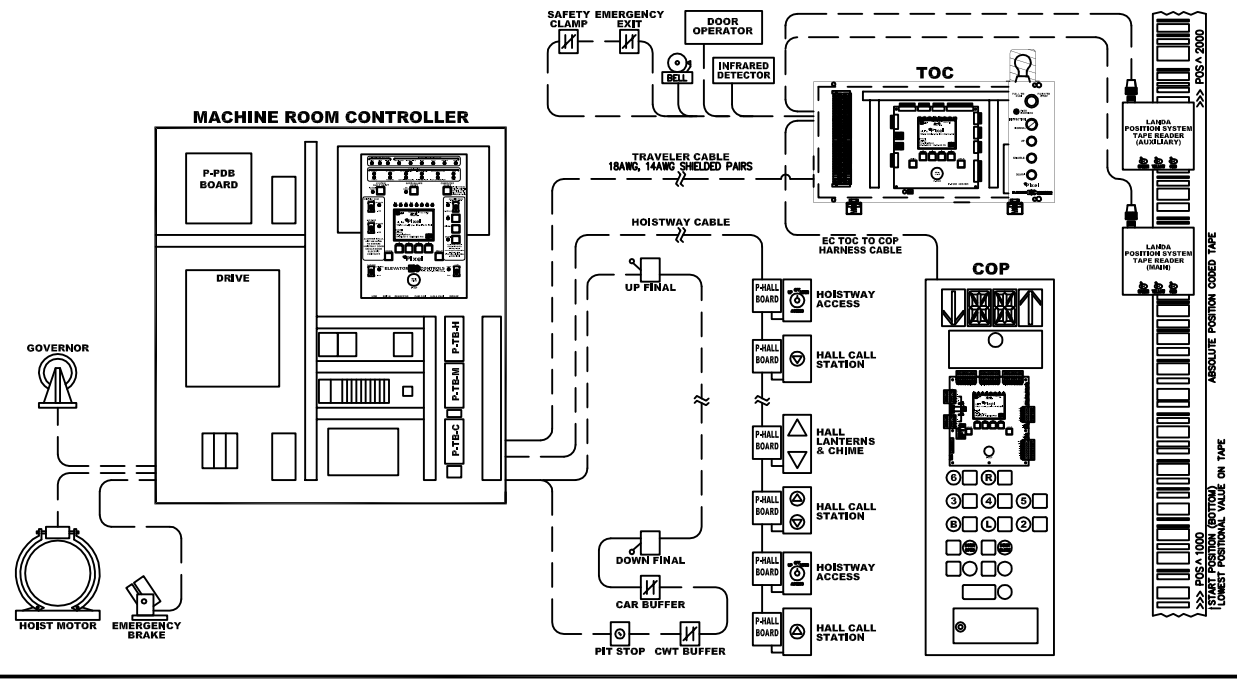

PIXEL CONSTRUCTION MODE OPERATION

CONSTRUCTION MODE OPERATION ALLOWS QUALIFIED ELEVATOR PERSONAL TO RUN THE CAR ON CARTOP & MACHINE ROOM WITH MINIMAL FIELD WIRING. THE TOP OF CAR BOX (TOC), LANDA POSITION SYSTEM & P-COP BOARD ARE NOT REQUIRED TO RUN THE CAR ON CONSTRUCTION MODE. THE MAXIMUM SPEED IS 50FPM OR PROGRAMMED INSPECTION SPEED, WHICHEVER IS LESS.

1 COMPLETE POWER, HOIST MOTOR AND BRAKE CONNECTIONS (REFER TO PAGE QR4 FOR HOISTWAY WIRING DIAGRAMS)

- ☐ A. VERIFY DISCONNECT POWER IS WITHIN 10% OF SPECIFIED VOLTAGE ON PAGE QR4 (OR PAGE 1)
- ☐ B. WIRE THE DISCONNECT TO CONTROLLER PER PAGE QR4 (OR PAGE 1)
- ☐ C. VERIFY THE HOIST MOTOR AND BRAKE DATA PLATES MATCH THE JOB PRINTS (PAGES 1 & 2)
- ☐ D. WIRE THE HOIST MOTOR AND MAIN BRAKE TO CONTROLLER PER PAGE QR4 (OR PAGES 1 & 2)
- ☐ E. WIRE THE VELOCITY ENCODER TO THE DRIVE ENCODER CARD PER PAGE QR4 (OR PAGE 1)
- ☐ F. IF AN INDEPENDENT MACHINE BRAKE IS USED FOR THE EMERGENCY BRAKE WIRE TO CONTROLLER PER PAGE QR4 (OR PAGE 2)

2 PLACE PIXEL CONTROL SYSTEM ON CONSTRUCTION MODE OPERATION

- ☐ IF THE PIXEL P-MP BOARD DISPLAYS "CONSTRUCTION" AT THE TOP OF THE LCD SKIP TO STEP 3
- ☐ A. PIXEL SWITCH PRESETTING: MACHINE ROOM INSPECTION=INSP POSITION, TEST=TEST POSITION & CAPTURE=CAPTURE POSITION
- ☐ B. FROM THE HOME SCREEN, SELECT "INSTALL" MENU USING THE TOUCH & GO KNOB
- ☐ C. ONCE IN THE INSTALLATION MENU SELECT "CONSTRUCTION MODE" USING THE TOUCH & GO KNOB
- ☐ D. AT THE CONSTRUCTION MODE MENU PRESS THE "ENABLE" SOFT KEY. IF CONSTRUCTION MODE IS "ACTIVE" SKIP TO STEP 3

3 INSTALL REQUIRED INSPECTION AND SAFETY DEVICES (REFER TO DIAGRAM TO THE RIGHT)

- ☐ A. GOVERNOR OVERSPEED SWITCH (TERMINALS GOV & 4A)
- ☐ B. CARTOP RUN BOX STOP SWITCH (TERMINALS SAFC & 4A)
- ☐ C. CARTOP RUN BOX INSPECTION SWITCH (TERMINALS ICT & 4A)
- ☐ D. CARTOP RUN BOX INSPECTION ENABLE, UP & DOWN BUTTONS (TERMINALS ICTE, ICTU, ICTD & 4A)

4 INSTALL REQUIRED CONSTRUCTION MODE TEMPORARY JUMPERS, IF DEVICES ARE NOT AVAILABLE AT THIS TIME

- ☐ A. HOISTWAY SAFETY STRING (TERMINALS SAFH TO SAFC)
- ☐ B. TOP DOOR LOCK (TERMINALS DLAT TO 4A)
- ☐ C. FRONT INTERMEDIATE DOOR LOCKS (TERMINALS DLSF TO 4A)
- ☐ D. BOTTOM DOOR LOCK (TERMINALS DLAB TO 4A)
- ☐ E. FRONT CAR GATE (TERMINALS CGF TO 4A)
- ☐ F. IF REAR DOORS ARE APPLICABLE, REAR INTERMEDIATE DOOR LOCKS (TERMINALS DLSR TO 4A)
- ☐ G. IF REAR DOORS ARE APPLICABLE, REAR CAR GATE (TERMINALS CGR TO 4A)
- ☐ H. HOISTWAY ACCESS INSPECTION SWITCH (TERMINALS IA TO 4A)
- ☐ I. IN-CAR INSPECTION ENABLE (TERMINALS IIC TO 4A)

NOTE: FOR CARTOP INSPECTION OPERATION ONLY, PLACE THE HOISTWAY AND CAR DOOR LOCK SWITCHES IN THE "BYPASS" POSITION AND SKIP THE INSTALLATION OF THE TEMPORARY DOOR LOCK JUMPERS (STEP 4: B-G).
MACHINE ROOM INSPECTION WILL NOT OPERATE WITH HOISTWAY AND/OR CAR DOOR BYPASS SWITCHES IN THE BYPASS POSITION

5 DRIVE PARAMETER VERIFICATION AND SETUP

- ☐ A. VERIFY DRIVE PARAMETERS ON PAGE QR7 MATCH THE ELEVATOR INSTALLATION REQUIREMENTS
- ☐ B. MOTOR AUTO-TUNE (REFER TO PAGE QR7)
- ☐ C. VERIFY PROPER DIRECTIONAL MOVEMENT ON INSPECTION OPERATION (REFER TO PAGE QR7)
- ☐ D. VERIFY RUNNING SPEED VS. COMMANDED SPEED WITH A HANDHELD TACHOMETER
  ADJUST THE SPEED AS REQUIRED BY MANIPULATING PARAMETERS (L1000A DRIVE):
  E1-04 AND E1-06 SHOULD BE ADJUSTED TO EQUAL VALUES
  E1-04 (MAX. OUTPUT FREQUENCY) – LOWER VALUES WILL DECREASE SPEED AND HIGHER VALUES WILL INCREASE SPEED
  E1-06 (BASE FREQUENCY) – LOWER VALUES WILL DECREASE SPEED AND HIGHER VALUES WILL INCREASE SPEED

CAUTION: ONCE THE TOC BOX, LANDA POSITION SYSTEM & P-COP BOARD HAVE BEEN INSTALLED AND THE CAR IS READY TO RUN ON AUTOMATIC OPERATION. VERIFY ALL CONSTRUCTION MODE TEMPORARY JUMPERS HAVE BEEN REMOVED AND THE REQUIRED SAFETY DEVICES HAVE BEEN INSTALLED, BEFORE DISABLING CONSTRUCTION MODE.

PIXEL AUTOMATIC OPERATION

6 AUTOMATIC OPERATION REQUIRES THE INSTALLATION OF:

- ☐ HOISTWAY SAFETY DEVICES (PIT STOP SWITCH, COUNTERWEIGHT BUFFER, CAR BUFFER, UP & DOWN FINAL LIMITS...ETC)
- ☐ TOC BOX (CARTOP INSPECTION STATION, EMERGENCY EXIT, SAFETY CLAMP, LANDA POSITION SYSTEM, DOOR OPERATOR, INFRARED DETECTOR...ETC)
- ☐ DOOR LOCKS (CAR GATE(S), HOISTWAY DOOR LOCKS)
- ☐ EMERGENCY BRAKE (ROPE GRIPPER OR INDEPENDENT MACHINE BRAKE...ETC)
- ☐ CAR OPERATING PANEL (HOISTWAY ACCESS, EMERGENCY STOP, CAR CALLS, DOOR BUTTONS, INDEPENDENT SERVICE...ETC)
- ☐ FIRE ALARM INITIATING DEVICES (FIRE PHASE 1 RECALL SWITCH, FIRE SENSORS...ETC)
- ☐ IF APPLICABLE EARTHQUAKE DEVICES (SEISMIC SWITCH, RING & STRING...ETC)

7 PIXEL HOISTWAY POSITION SETUP OVERVIEW (REFER TO PIXEL MANUAL FOR DETAILS):

- ☐ A. TAPE READER OFFSET: INSTALL>LEARN FUNCTIONS>VIRTUAL LIMITS>TAPE READER OFFSET, THEN LEARN>SAVE
- ☐ B. FLOOR LANDING DOOR ZONES: INSTALL>LEARN FUNCTIONS>FLOOR SETUP>LANDING NUMBER, THEN DOOR ZONE POSTION>LEARN>SAVE
  NOTE: ALWAYS LEARN THE BOTTOM LANDING DOOR ZONE FIRST. THIS NORMALIZES THE HOISTWAY POSITION AND THE BOTTOM LANDING WILL BE SET TO 1.2 FEET. THE VIRTUAL DOWN NORMAL LIMIT WILL BE AUTOMATICALLY SET TO 1.0 FEET.
- ☐ C. BOTTOM (BAL) AND TOP (TAL) HOISTWAY ACCESS LIMIT ZONES: INSTALL>LEARN FUNCTIONS>VIRTUAL LIMITS>BAL & TAL, THEN LEARN>SAVE

8 DISABLE CONSTRUCTION MODE OPERATION

- ☐ A. PIXEL SWITCH PRESETTING: MACHINE ROOM INSPECTION=INSP POSITION, TEST=TEST POSITION & CAPTURE=CAPTURE POSITION
- ☐ B. FROM THE HOME SCREEN, SELECT "INSTALL" MENU USING THE TOUCH & GO KNOB
- ☐ C. ONCE IN THE INSTALLATION MENU SELECT "CONSTRUCTION MODE" USING THE TOUCH & GO KNOB
- ☐ D. AT THE CONSTRUCTION MODE MENU PRESS THE "DISABLE" SOFT KEY, THE CONSTRUCTION MODE MENU WILL NOW DISPLAY "DISABLED"

9 PIXEL HOISTWAY TERMINAL SLOWDOWN SETUP (REFER TO PIXEL MANUAL FOR DETAILS):

- ☐ A. TURN OFF MACHINE ROOM INSPECTION & PLACE THE CAR ON TEST MODE. CLEAR ANY FAULTS THAT ARE DISPLAYED.
- ☐ B. REGISTER CAR CALLS TO INTERMEDIATE FLOORS USING THE AUTO CALL SIMULATION SCREEN: TROUBLESHOOT>AUTO CALL SIMULATION>RUN TO FLOOR 00_. DO NOT REGISTER CALLS TO THE TERMINAL LANDINGS UNTIL ETS IS LEARNED.
- ☐ C. BOTTOM & TOP EMERGENCY TERMINAL SLOWDOWN LIMITS: INSTALL>LEARN FUNCTIONS>ETS LEARN>FOLLOW ON SCREEN INSTRUCTIONS, THEN SAVE

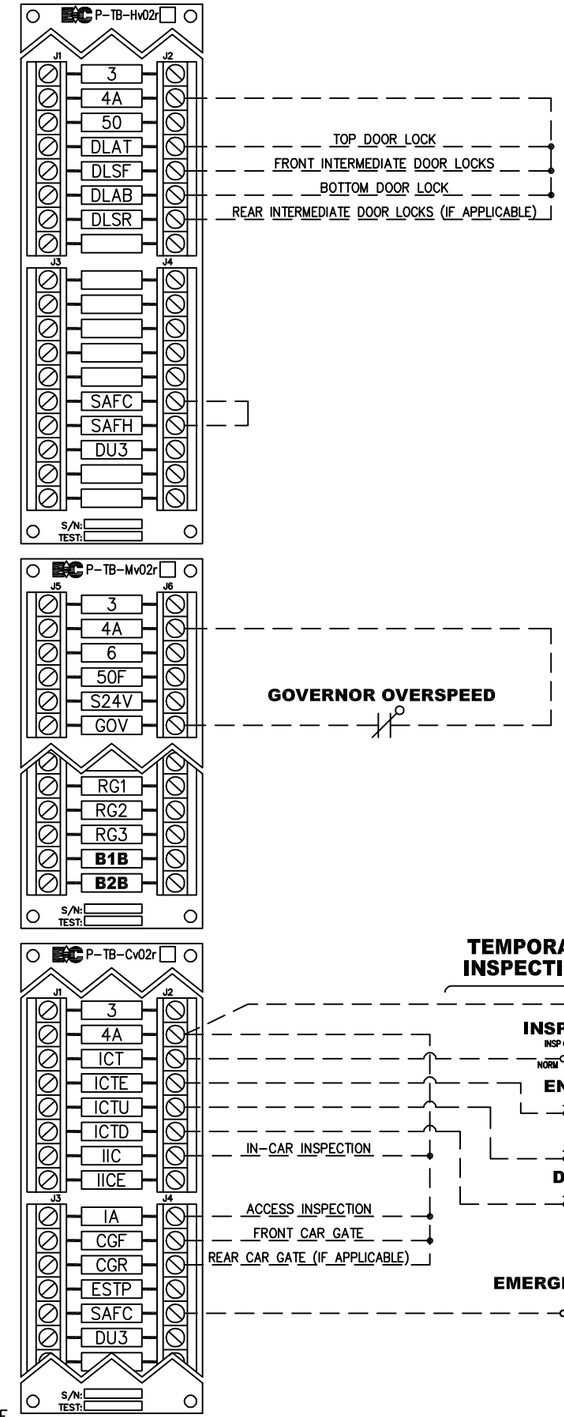

P-MP BOARD SWITCH GEAR NOTES:

- MACHINE ROOM INSPECTION DIRECTIONAL CONTROL REQUIRES UP OR DOWN AND THE ENABLE BUTTON TO BE PUSHED SIMULTANEOUSLY
- CAPTURE SWITCH: DISABLES HALL CALL OPERATION TO COMMANDEER FOR FOR TEST MODE
- TEST SWITCH: DISABLES DOOR & HALL CALL OPERATION FOR TESTING
- HOISTWAY DOOR BYPASS SWITCH: BYPASSES HOISTWAY DOOR SAFETY CIRCUIT ONLY OPERATIONAL ON CARTOP & IN-CAR INSPECTION MODES
- CAR DOOR BYPASS SWITCH: BYPASSES CAR DOOR SAFETY CIRCUIT ONLY OPERATIONAL ON CARTOP & IN-CAR INSPECTION MODES

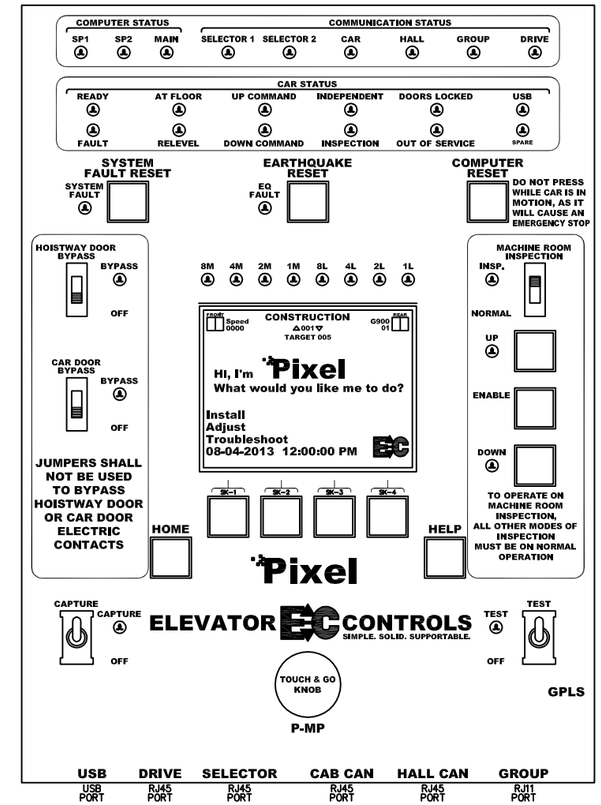

PIXEL QUICK START UP INSTRUCTIONS

JOB NAME: **215 PEARL STREET (R1 & R2)**

CUSTOMER: **G-TECH ASSOCIATES, LLC.**

ENGINEERED BY: Jason Kirlis | DATE: 07/14/17 | REVISION DATE:

ELEVATOR CONTROLS
6150 WAREHOUSE WAY
SACRAMENTO, CA 95826 USA
PHONE: (800)829-8106 FAX: (916)428-1728
www.elevatorcontrols.com

CONTROLLER MODEL: PIXEL AC VECTOR-GL-L2

JOB NUMBER: 17-19017

CONTROLLER ID: A & B | PAGE NUMBER: QR1

M_PIXEL-QR1.dwg 05/18/17
FILE: J19017_QR1.dwg

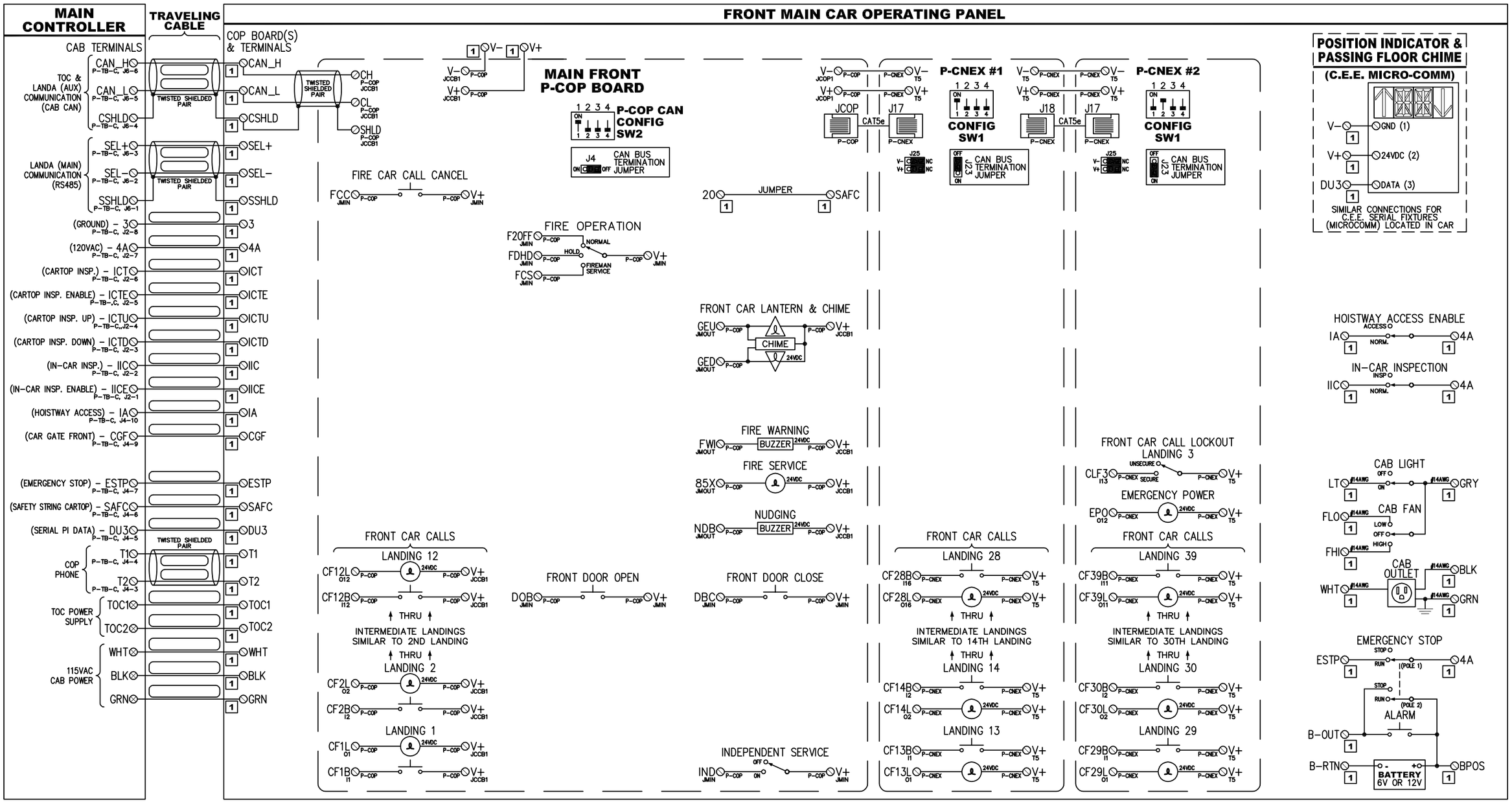

1 TERMINAL PROVIDED BY COP MANUFACTURER OR CUSTOMER

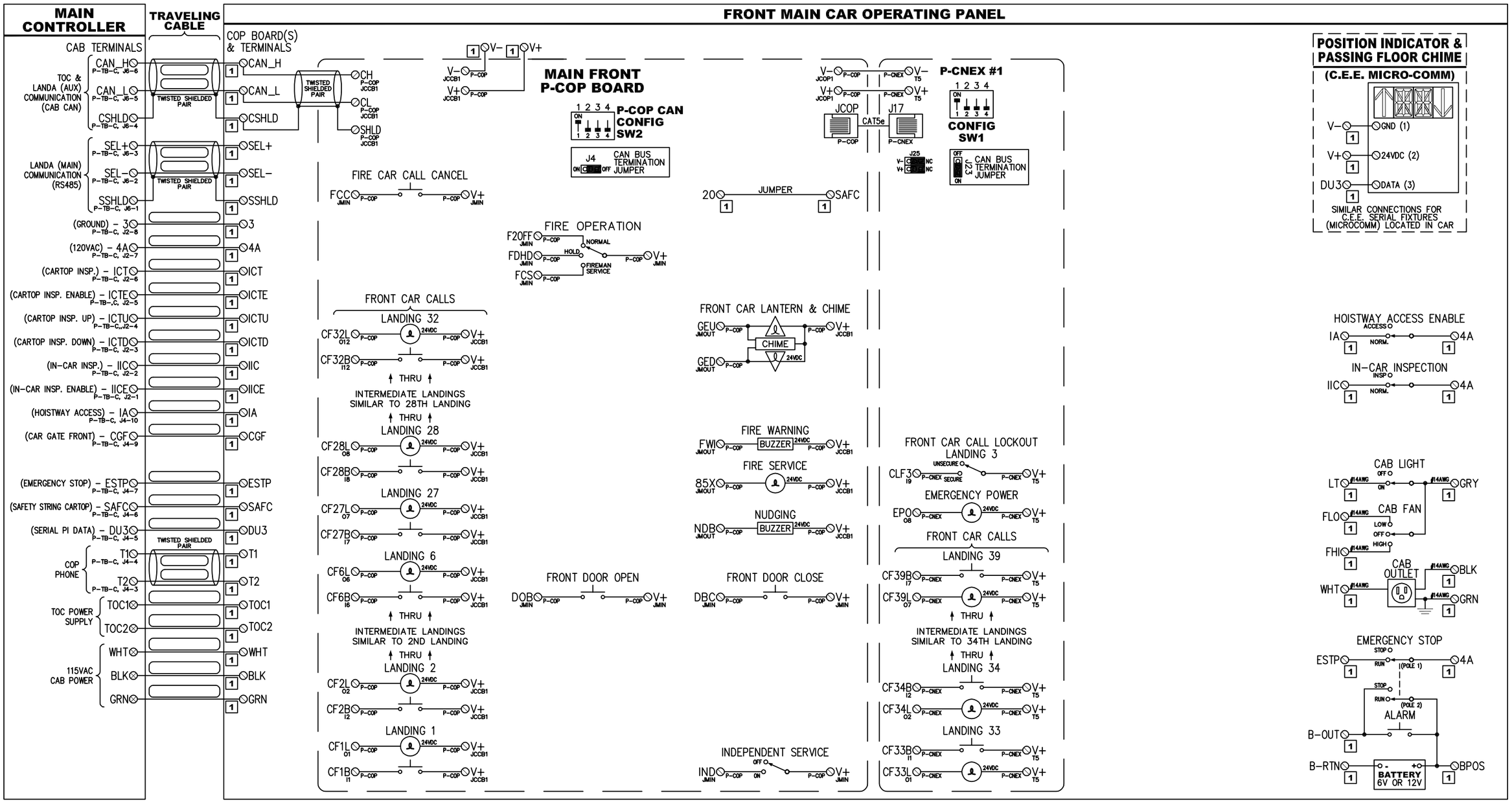

PLANK SWITCH

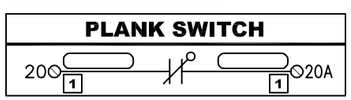

SLACK CABLE OR COMP. SWITCH

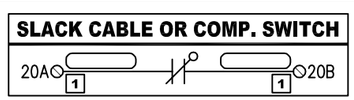

CAB JUNCTION BOX

3	4A								DU3
ICT	ICTE	ICTU	ICTD	SAFC	ESTP	IA	IIC	IICE	CGF
TOC1	TOC2								
WHT	BLK	GRN							
CAN_H	CAN_L	SEL−	SEL+						
T1	T2								

TELEPHONE

TRAVELING CABLE WIRE COUNT

- 15 #18 AWG
- 3 #14 AWG
- 3 SHIELDED PAIR

10% SPARE WIRES IS RECOMMENDED

REFER TO PAGE QR3 FOR TOP OF CAR WIRING DIAGRAMS

COP FIXTURE REQUIREMENTS

FIXTURE DESCRIPTION:	VOLTAGE	CONTINUOUS	MAXIMUM
CAR CALL INDICATOR	24VDC	0.2A	0.5A
FIRE INDICATOR	24VDC	0.2A	0.5A
FIRE BUZZER	24VDC	0.2A	0.5A
MISCELLANEOUS FIXTURES	24VDC	0.2A	0.5A
PASSING FLOOR CHIME	24VDC	0.5A	2A
CAR LANTERNS & CHIME	24VDC	0.5A	2A

1 TERMINAL PROVIDED BY COP MANUFACTURER OR CUSTOMER

PIXEL INSTALLATION: COP WIRING DIAGRAMS

JOB NAME: **215 PEARL STREET (R1 & R2)**

CUSTOMER: **G-TECH ASSOCIATES, LLC.**

ENGINEERED BY: Jason Kirlis | DATE: 07/14/17 | REVISION DATE:

ELEVATOR CONTROLS
6150 WAREHOUSE WAY
SACRAMENTO, CA 95826 USA
PHONE:(800)829-8106 FAX:(916)428-1728
www.elevatorcontrols.com

CONTROLLER MODEL: PIXEL AC VECTOR-GL-L2

JOB NUMBER: 17-19017

CONTROLLER ID: B | PAGE NUMBER: QR2

M_PIXEL-QR2.dwg 03/26/16

FILE: J19017-B_QR2.dwg

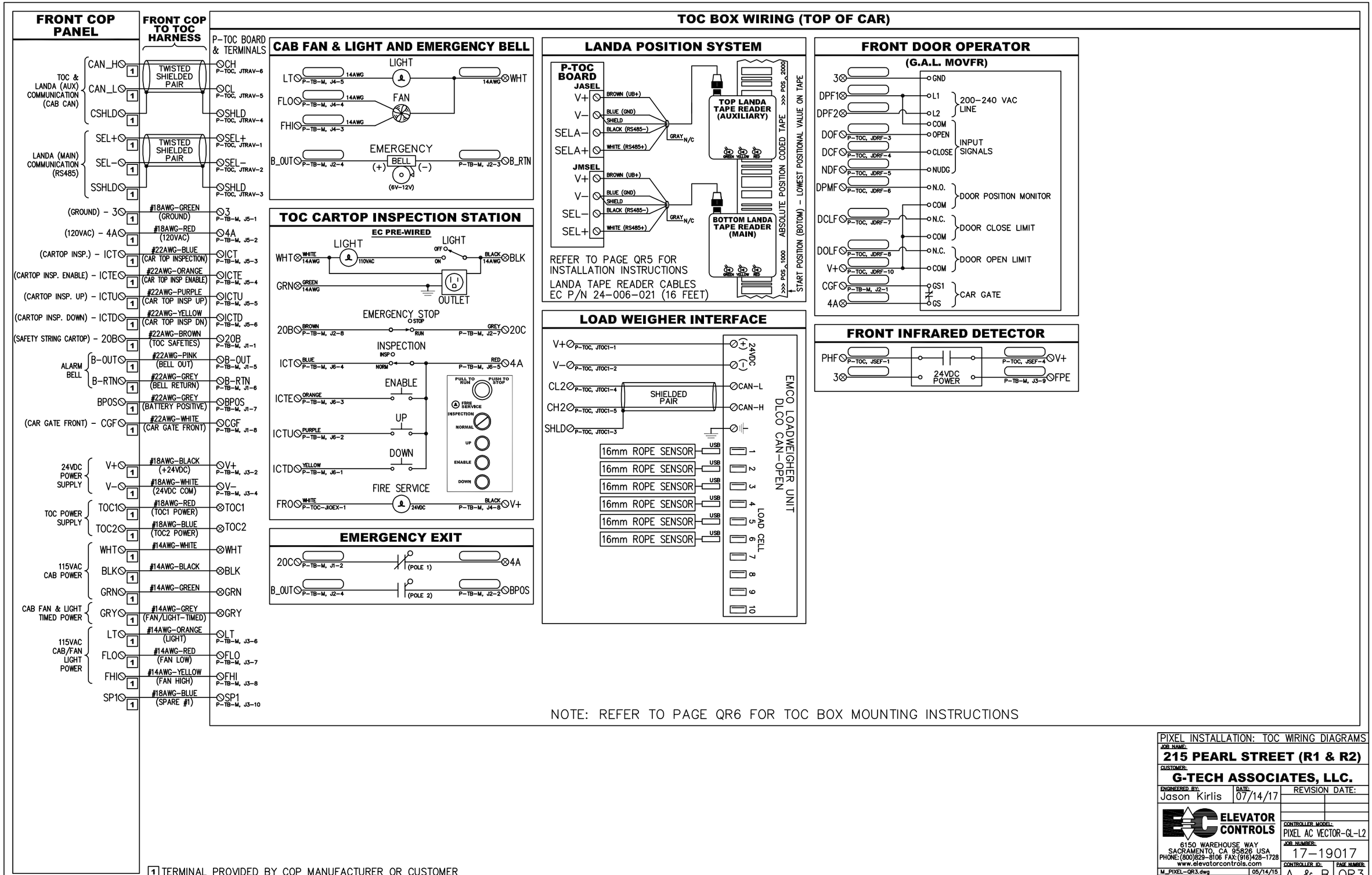

PIXEL INSTALLATION: TOC WIRING DIAGRAMS

JOB NAME: **215 PEARL STREET (R1 & R2)**

CUSTOMER: **G-TECH ASSOCIATES, LLC.**

ENGINEERED BY: Jason Kirlis | DATE: 07/14/17 | REVISION DATE:

ELEVATOR CONTROLS
6150 WAREHOUSE WAY
SACRAMENTO, CA 95826 USA
PHONE: (800)829-8106 FAX: (916)428-1728
www.elevatorcontrols.com

CONTROLLER MODEL: PIXEL AC VECTOR-GL-L2

JOB NUMBER: 17-19017

CONTROLLER ID: A & B | PAGE NUMBER: QR3

M_PIXEL-QR3.dwg 05/14/15
FILE: J19017_QR3.dwg

FIRE COMMAND PANEL

(C.E.E. MICRO-COMM)

3 P-TB-H → 1 (COM)
50 P-TB-H → 2 (V+)
DU3 P-TB-H → 3 (DATA)

DOOR OPEN JEWEL
DCL0F 02 P-CNEX — 24VDC — P-CNEX V+ T5

DOOR CLOSE JEWEL
DOL0F 01 P-CNEX — 24VDC — P-CNEX V+ T5

SYSTEM TROUBLE JEWEL
HCR0 03 P-CNEX — 24VDC — P-CNEX V+ T5

CAR TO LOBBY
CTL P-TB-M — OFF / ON — P-TB-H 50

CARD READER OVERRIDE
CMR0 I10 P-CNEX #3 — OFF / ON — P-CNEX #3 V+ T5

EMERGENCY POWER JEWEL
EPL P-TB-M — 24VDC — P-TB-H 50

EMERGENCY POWER CAR SELECT
ECS2 I6 P-CNEX #1Z — CAR B
ECS1 I5 P-CNEX #1Z — CAR A — P-TB-M S24V
AUTO I4 P-CNEX #1Z — AUTO

FIRE SERVICE
F10 08 P-CNEX #1Z — 24VDC — P-TB-M S24V

ADDITIONAL FIRE RECALL
FON2 I7 P-CNEX #1Z — OFF / ON — P-TB-M S24V

EMERGENCY POWER

EMERGENCY POWER PHASE 2
EP2 03 P-CNEX #1Z — 24VDC — P-TB-M S24V

EMERGENCY POWER PHASE 1
EP1 02 P-CNEX #1Z — 24VDC — P-TB-M S24V

EMERGENCY POWER
EPI I1 P-CNEX #1Z — P-TB-M S24V
(OPEN FOR NORMAL POWER & CLOSED FOR EMERGENCY POWER)

PRE-TRANSFER
EPTC — P-TB-M S24V
(CLOSE 5-10 SECONDS PRIOR TO TRANSFERING FROM EMERGENCY TO NORMAL POWER)

RECALL COMPLETE
E1C P-TB-M — 24VDC — P-TB-H 50

HOISTWAY DOOR LOCKS

FRONT TOP
DLAT P-TB-H — P-TB-H 4A

FRONT INTERMEDIATE
DLSF P-TB-H — P-TB-H 4A

FRONT BOTTOM
DLAB P-TB-H — P-TB-H 4A

GOVERNOR OVERSPEED

GOV P-TB-M — P-TB-M 4A

GOVERNOR TENSION SHEAVE

GVT — P-TB-M S24V
(CONTACT CLOSES WHEN TENSION SHEAVE MALFUNCTIONS)

UP FINAL LIMIT

22 — P-TB-H SAFC
(OPEN 6" ABOVE FLOOR)

DOWN FINAL LIMIT

21D — 22
(OPEN 6" BELOW FLOOR)

COMPENSATION CHAIN SHEAVE SWITCH

21C — 21D

CAR BUFFER

21B — 21C

COUNTERWEIGHT BUFFER

21A — 21B

PIT EMERGENCY STOP SWITCH

SAFH P-TB-H — STOP / RUN — 21A

FIRE SERVICE

MAIN FIRE RECALL SWITCH IS PART OF P-HALL BOARD WIRING

FIRE ALARM INITIATING DEVICES

MAIN FLOOR
FRA P-TB-M — P-TB-M 50F
(RETURNS CAR(S) TO THE ALTERNATE FIRE RECALL FLOOR)

ALL FLOORS EXCEPT MAIN
FRS P-TB-M — P-TB-M 50F
(RETURNS CAR(S) TO THE MAIN FIRE RECALL FLOOR)

HOISTWAY OR MACHINE ROOM
HF1 P-TB-M — P-TB-M 50F
(RETURNS CAR(S) TO THE MAIN FIRE RECALL FLOOR & FLASHES COP FIRE INDICATORS(S) "85X")

HOISTWAY OR MACHINE ROOM
HF2 P-TB-M — P-TB-M 50F
(RETURNS CAR(S) TO THE ALTERNATE FIRE RECALL FLOOR & FLASHES COP FIRE INDICATORS(S) "85X")

HALL POSITION INDICATOR

(C.E.E. MICRO-COMM)

3 P-TB-H → 1 (COM)
50 P-TB-H → 2 (V+)
DU3 P-TB-H → 3 (DATA)

SIMILAR CONNECTIONS FOR C.E.E. SERIAL FIXTURES (MICROCOMM) LOCATED IN THE HALL

FLOOR OPENINGS

BLDG. LDG.	FLOOR LABEL	(ELEV. #R1) F	R
39	39	X	
38	38	X	
37	37	X	
36	36	X	
35	35	X	
34	34	X	
33	33	X	
32	32	X	
31	31	X	
30	30	X	
29	29	X	
28	28	X	
27	27	X	
26	26	X	
↑	THRU		↑
14	14	X	
13	12	X	
↑	THRU		↑
7	6	X	
6	5	X	
5	4	X	
4	3	X	
3	2	X	
*2	L	X	
1	C	X	
SPEED:		500fpm	
CAPACITY:		2,000lbs	

MACHINE BRAKE

BRAKE COIL
B2 — B1

BRAKE CONTACT
BPI P-TB-M — BPIX
(CONTACT CLOSES WHEN BRAKE IS PICKED)

EMERGENCY BRAKE

BRAKE COIL
B2B P-TB-M — P-TB-M B1B

BRAKE CONTACT
BPIX — P-TB-H 50
(CONTACT CLOSES WHEN BRAKE IS PICKED)

HALL CALL CARD READERS

(CLOSE CONTACT TO SECURE LANDING)

FRONT LANDING 39
HLF39 I9 P-CNEX #3 — P-CNEX #3 V+ T5
↑ THRU
FRONT LANDING 31
HLF31 I1 P-CNEX #3 — P-CNEX #3 V+ T5
FRONT LANDING 30
HLF30 I16 P-CNEX #2 — P-CNEX #2 V+ T5
↑ THRU
FRONT LANDING 15
HLF15 I1 P-CNEX #2 — P-CNEX #2 V+ T5
FRONT LANDING 14
HLF14 I16 P-CNEX — P-CNEX V+ T5
↑ THRU
FRONT LANDING 3
HLF3 I5 P-CNEX — P-CNEX V+ T5
FRONT LANDING 1
HLF1 I4 P-CNEX — P-CNEX V+ T5

MOTOR WIRING

NOTES:
CONDUCTORS MUST HAVE AN AMPACITY RATING IN ACCORDANCE WITH TABLE 310.16 (COPPER/75°C) OF THE NATIONAL ELECTRICAL CODE

DO NOT ROUTE INCOMING CONTROLLER POWER OR MOTOR WIRES NEAR PRINTED CIRCUIT BOARDS

REFER TO HOIST MOTOR DATA PLATE & MANUAL FOR PROPER MOTOR LEAD WIRING.

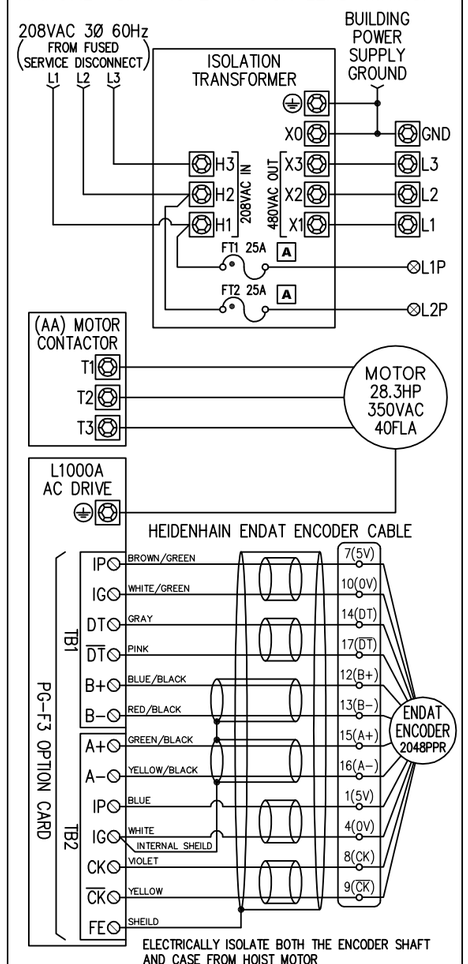

A RECOMMENDED FUSING BY CUSTOMER (250V FRN)

CONTROLLER TO HOISTWAY CONNECTIONS

3	4A							50	50F
SAFH	21A	21B	21C	21D	22		SAFC	GVT	DU3
AUTO	ECS1	ECS2					EP1	EP2	V+
				S24V	EPI	EPTC	E1C	EPRUN	
FRA	FRS	HF1	HF2			DOLOF	DCLOF	HCRO	CTL
DLAT	DLSF	DLAB				EPL	CMRO	F10	FON2

WIRE COUNT

39	#18 AWG
0	#14 AWG
0	SHIELED PAIR
1	CAT5e CABLE

10% SPARE WIRES IS RECOMMENDED

1 TERMINAL IS NOT PROVIDED IN CONTROLLER. REFERENCE POINT ONLY.

PIXEL INSTALLATION: HOISTWAY & MACHINE ROOM WIRING DIAGRAMS

JOB NAME: **215 PEARL STREET (R1 & R2)**

CUSTOMER: **G-TECH ASSOCIATES, LLC.**

ENGINEERED BY: Jason Kirlis — DATE: 07/14/17 — REVISION DATE: 11/06/2017 JPK

ELEVATOR CONTROLS
6150 WAREHOUSE WAY
SACRAMENTO, CA 95826 USA
PHONE:(800)829-8106 FAX:(916)428-1728
www.elevatorcontrols.com

CONTROLLER MODEL: PIXEL AC VECTOR-GL-L2

JOB NUMBER: 17-19017

CONTROLLER ID: A — PAGE NUMBER: QR4

M_PIXEL-QR4.dwg 10/25/16
FILE: J19017-A_QR4-M1.dwg

FIRE COMMAND PANEL

(C.E.E. MICRO-COMM)

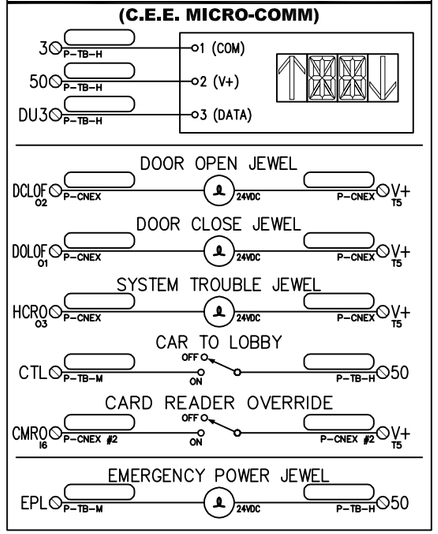

EMERGENCY POWER

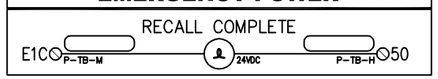

GROUPLESS INTERCONNECTIONS

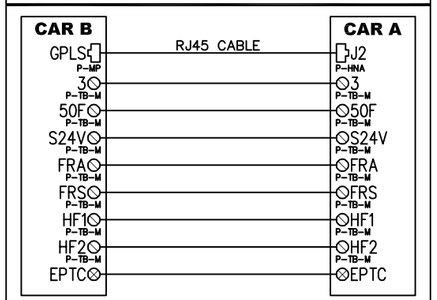

GROUP COMMUNICATION CABLES SHALL BE IN A SEPARATE CONDUIT NOT SHARED BY OTHER WIRES

GROUPLESS COMMUNICATION CABLES		
CAR(S)	EC P/N:	PART DESCRIPTION:
B	19-001-023-X	COM CABLE: **25** FEET

HOISTWAY DOOR LOCKS

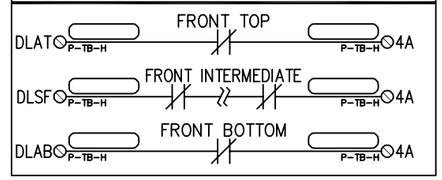

GOVERNOR OVERSPEED

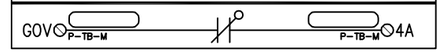

GOVERNOR TENSION SHEAVE

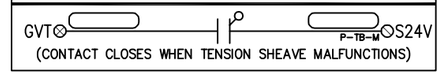

UP FINAL LIMIT

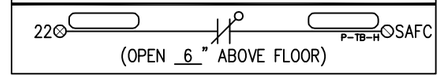

DOWN FINAL LIMIT

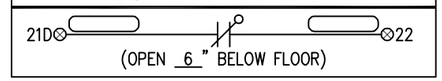

COMPENSATION CHAIN SHEAVE SWITCH

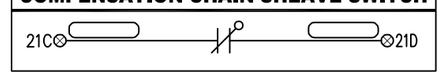

CAR BUFFER

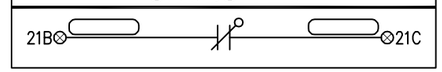

COUNTERWEIGHT BUFFER

PIT EMERGENCY STOP SWITCH

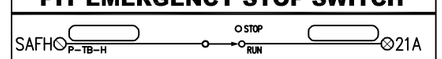

HALL POSITION INDICATOR

(C.E.E. MICRO-COMM)

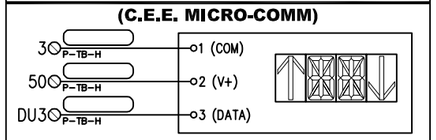

SIMILAR CONNECTIONS FOR C.E.E. SERIAL FIXTURES (MICROCOMM) LOCATED IN THE HALL

FLOOR OPENINGS

BLDG. LDG.	FLOOR LABEL	(ELEV. #R2) F	R
39	39	X	
38	38	X	
37	37	X	
36	36	X	
35	35	X	
34	34	X	
33	33	X	
32	32	X	
31	31	X	
30	30	X	
29	29	X	
28	28	X	
27	27	X	
26	26		
↑	THRU		↑
7	6		
6	5	X	
5	4	X	
4	3	X	
3	2	X	
*2	L	X	
1	C	X	
SPEED:		700fpm	
CAPACITY:		2,500lbs	

MACHINE BRAKE

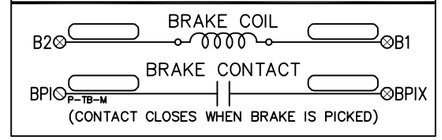

EMERGENCY BRAKE

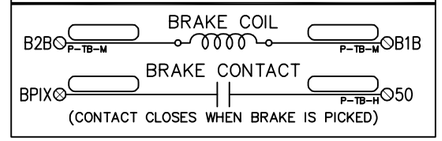

CAR CALL CARD READERS

(CLOSE CONTACT TO SECURE LANDING)

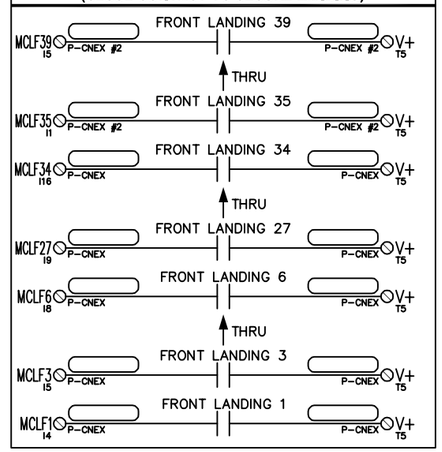

MOTOR WIRING

NOTES:

CONDUCTORS MUST HAVE AN AMPACITY RATING IN ACCORDANCE WITH TABLE 310.16 (COPPER/75°C) OF THE NATIONAL ELECTRICAL CODE

DO NOT ROUTE INCOMING CONTROLLER POWER OR MOTOR WIRES NEAR PRINTED CIRCUIT BOARDS

REFER TO HOIST MOTOR DATA PLATE & MANUAL FOR PROPER MOTOR LEAD WIRING.

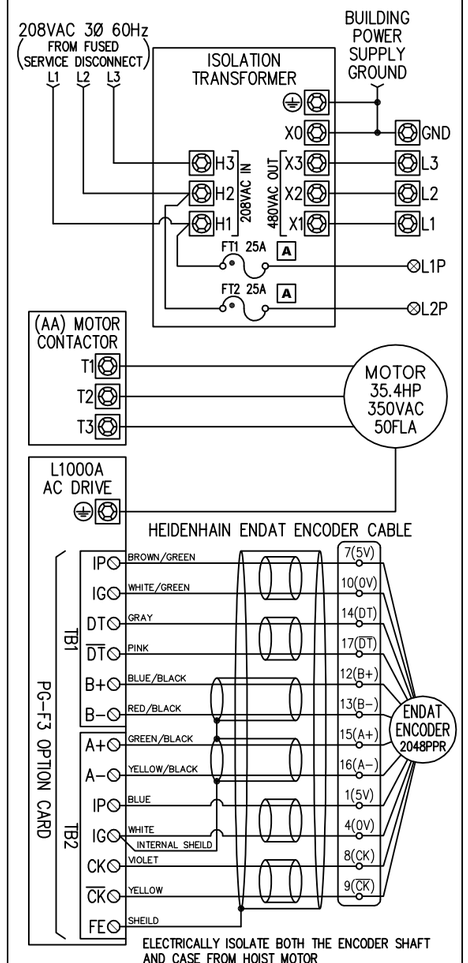

A RECOMMENDED FUSING BY CUSTOMER (250V FRN)

CONTROLLER TO HOISTWAY CONNECTIONS

3	4A							50	
SAFH	21A	21B	21C	21D	22		SAFC	GVT	DU3
							E1C		V+
						DOLOF	DCLOF	HCRO	CTL
DLAT	DLSF	DLAB				EPL	CMRO		

WIRE COUNT

23	**#18 AWG**
0	**#14 AWG**
0	**SHIELED PAIR**
1	**CAT5e CABLE**

10% SPARE WIRES IS RECOMMENDED

1 TERMINAL IS NOT PROVIDED IN CONTROLLER. REFERENCE POINT ONLY.

PIXEL INSTALLATION: HOISTWAY & MACHINE ROOM WIRING DIAGRAMS

JOB NAME: **215 PEARL STREET (R1 & R2)**

CUSTOMER: **G-TECH ASSOCIATES, LLC.**

ENGINEERED BY: Jason Kirlis | DATE: 07/14/17 | REVISION DATE: 11/06/2017 JPK

ELEVATOR CONTROLS
6150 WAREHOUSE WAY
SACRAMENTO, CA 95826 USA
PHONE:(800)829-8106 FAX:(916)428-1728
www.elevatorcontrols.com

M_PIXEL-QR4.dwg 10/25/16
FILE: J19017-B_QR4-M1.dwg

CONTROLLER MODEL: PIXEL AC VECTOR-GL-L2

JOB NUMBER: 17-19017

CONTROLLER ID: B | PAGE NUMBER: QR4

TYPICAL P-HALL BOARD INTERCONNECTIONS

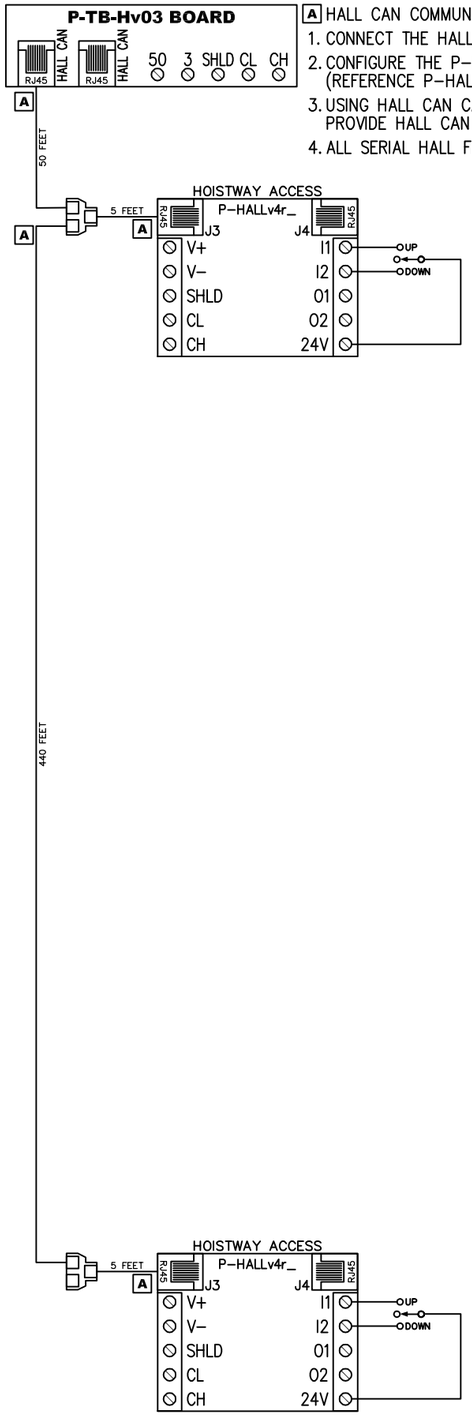

A HALL CAN COMMUNICATION CABLES ARE CAT5e TERMINATED WITH RJ45 CONNECTOR AND WIRED TO 568-B STANDARDS.

1. CONNECT THE HALL CALL FIXTURE TO THE P-HALL BOARD I/O AS SHOWN BELOW.
2. CONFIGURE THE P-HALL BOARD DIP SWITCH SETTINGS FOR THE CORRESPONDING HALL FIXTURE. (REFERENCE P-HALL CONFIGURATION TABLE)
3. USING HALL CAN CABLES AND SPLITTERS TO INTERCONNECT THE P-HALL BOARDS AS SHOWN BELOW, THESE CABLES PROVIDE HALL CAN COMMUNICATION & POWER (24VDC/GND) TO EACH P-HALL BOARD.
4. ALL SERIAL HALL FIXTURES MUST BE RATED 24VDC/0.5A MAX. PEAK/0.2A MAX. CONTINUOUS.

QTY:	EC P/N:	PART DESCRIPTION:
2	17-002-114v04	P-HALLv04 BOARD
2	10-008-009	RJ45 SPLITTER
0	19-001-023-06in	CAN CABLE: 6 INCH
2	19-001-023-05ft	CAN CABLE: 5 FEET
0	19-001-023-07ft	CAN CABLE: 7 FEET
0	19-001-023-14ft	CAN CABLE: 14 FEET
0	19-001-023-25ft	CAN CABLE: 25 FEET
1	19-001-023-X	CAN CABLE: **50** FEET
1	19-001-023-X	CAN CABLE: **440** FEET

P-HALL BOARD CONFIGURATION TABLE

1. SET P-HALL BOARD DIP SWITCHES FOR THE RESPECTIVE LANDING NUMBER AND FUNCTION, USING THE BELOW CONFIGURATION TABLE.
2. SET P-HALL BOARD JP1 SWITCH FOR THE RESPECTIVE FUNCTION BY SLIDING THE SWITCH INTO THE APPROPRIATE POSITION, USING THE BELOW CONFIGURATION TABLE.

DIP SWITCHES (1) THRU (32) LANDING ADDRESS SELECTION			DIP SWITCHES (FR), (X) & (G) FUNCTION SELECTION		
LANDING NUMBER	JP1 IS OFF	FLOOR DESIGNATION	FRONT HALL CALL	FRONT HOSPITAL CALL	FRONT HALL LANTERN
	JP1	1 2 4 8 16 32 FR X G ON	FR X G ON	FR X G ON	FR X G ON

DIP SWITCHES (1) thru (G) FUNCTION SELECTION			
LANDING NUMBER	MISCELLANEOUS FUNCTIONS	JP1 IS ON	FUNCTION SETTINGS
24	HOISTWAY ACCESS TOP	JP1	1 2 4 8 16 32 FR X G ON
1	HOISTWAY ACCESS BOTTOM	JP1	1 2 4 8 16 32 FR X G ON

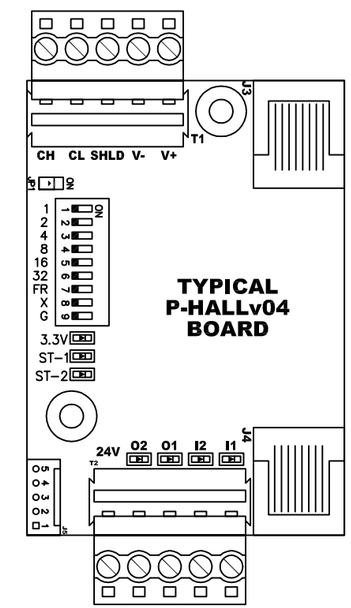

DIMENSIONS (W/ CONNECTORS)
4"H X 2 1/8"W 7/8"D

FRONT P-HALL HOISTWAY WIRING DIAGRAMS

JOB NAME: **215 PEARL STREET (R1 & R2)**

CUSTOMER: **G-TECH ASSOCIATES, LLC.**

ENGINEERED BY: Jason Kirlis | DATE: 07/14/17 | REVISION DATE:

ELEVATOR CONTROLS
6150 WAREHOUSE WAY
SACRAMENTO, CA 95826 USA
PHONE:(800)829-8106 FAX:(916)428-1728
www.elevatorcontrols.com

CONTROLLER MODEL: PIXEL AC VECTOR-GL-L2

JOB NUMBER: 17-19017

CONTROLLER ID: A & B | PAGE NUMBER: QR4b

M_PIXEL-QR4b.dwg 11/14/16

FILE: J19017_QR4b.dwg

TYPICAL P-HALL BOARD INTERCONNECTIONS

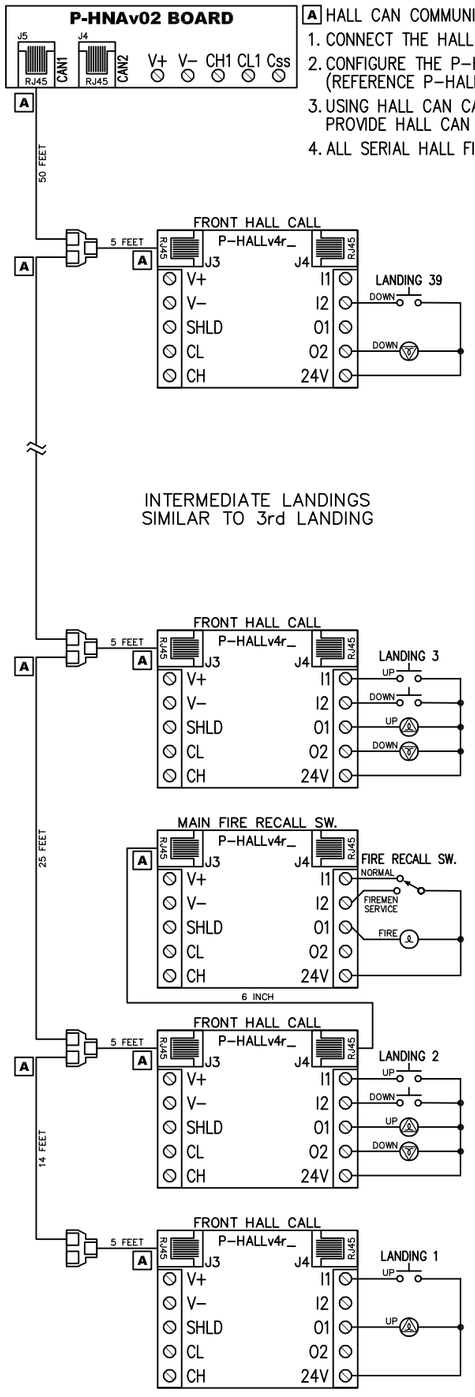

A HALL CAN COMMUNICATION CABLES ARE CAT5e TERMINATED WITH RJ45 CONNECTOR AND WIRED TO 568-B STANDARDS.

1. CONNECT THE HALL CALL FIXTURE TO THE P-HALL BOARD I/O AS SHOWN BELOW.
2. CONFIGURE THE P-HALL BOARD DIP SWITCH SETTINGS FOR THE CORRESPONDING HALL FIXTURE. (REFERENCE P-HALL CONFIGURATION TABLE)
3. USING HALL CAN CABLES AND SPLITTERS TO INTERCONNECT THE P-HALL BOARDS AS SHOWN BELOW, THESE CABLES PROVIDE HALL CAN COMMUNICATION & POWER (24VDC/GND) TO EACH P-HALL BOARD.
4. ALL SERIAL HALL FIXTURES MUST BE RATED 24VDC/0.5A MAX. PEAK/0.2A MAX. CONTINUOUS.

QTY:	EC P/N:	PART DESCRIPTION:
40	17-002-114v04	P-HALLv04 BOARD
39	10-008-009	RJ45 SPLITTER
1	19-001-023-06in	CAN CABLE: 6 INCH
39	19-001-023-05ft	CAN CABLE: 5 FEET
0	19-001-023-07ft	CAN CABLE: 7 FEET
30	19-001-023-14ft	CAN CABLE: 14 FEET
8	19-001-023-25ft	CAN CABLE: 25 FEET
1	19-001-023-X	CAN CABLE: **50** FEET

P-HALL BOARD CONFIGURATION TABLE

1. SET P-HALL BOARD DIP SWITCHES FOR THE RESPECTIVE LANDING NUMBER AND FUNCTION, USING THE BELOW CONFIGURATION TABLE.
2. SET P-HALL BOARD JP1 SWITCH FOR THE RESPECTIVE FUNCTION BY SLIDING THE SWITCH INTO THE APPROPRIATE POSITION, USING THE BELOW CONFIGURATION TABLE.

DIP SWITCHES (1) THRU (32) LANDING ADDRESS SELECTION			DIP SWITCHES (FR), (X) & (G) FUNCTION SELECTION			DIP SWITCHES (1) THRU (G) FUNCTION SELECTION			
LANDING NUMBER	JP1 IS OFF	FLOOR DESIGNATION	HALL CALL		HOSPITAL CALL	LANDING NUMBER	MISCELLANEOUS FUNCTIONS	JP1 IS ON	FUNCTION SETTINGS
	JP1	1 2 4 8 16 32 FR X G	FR X G		FR X G	2	MAIN FIRE RECALL	JP1	1 2 4 8 16 32 FR X G

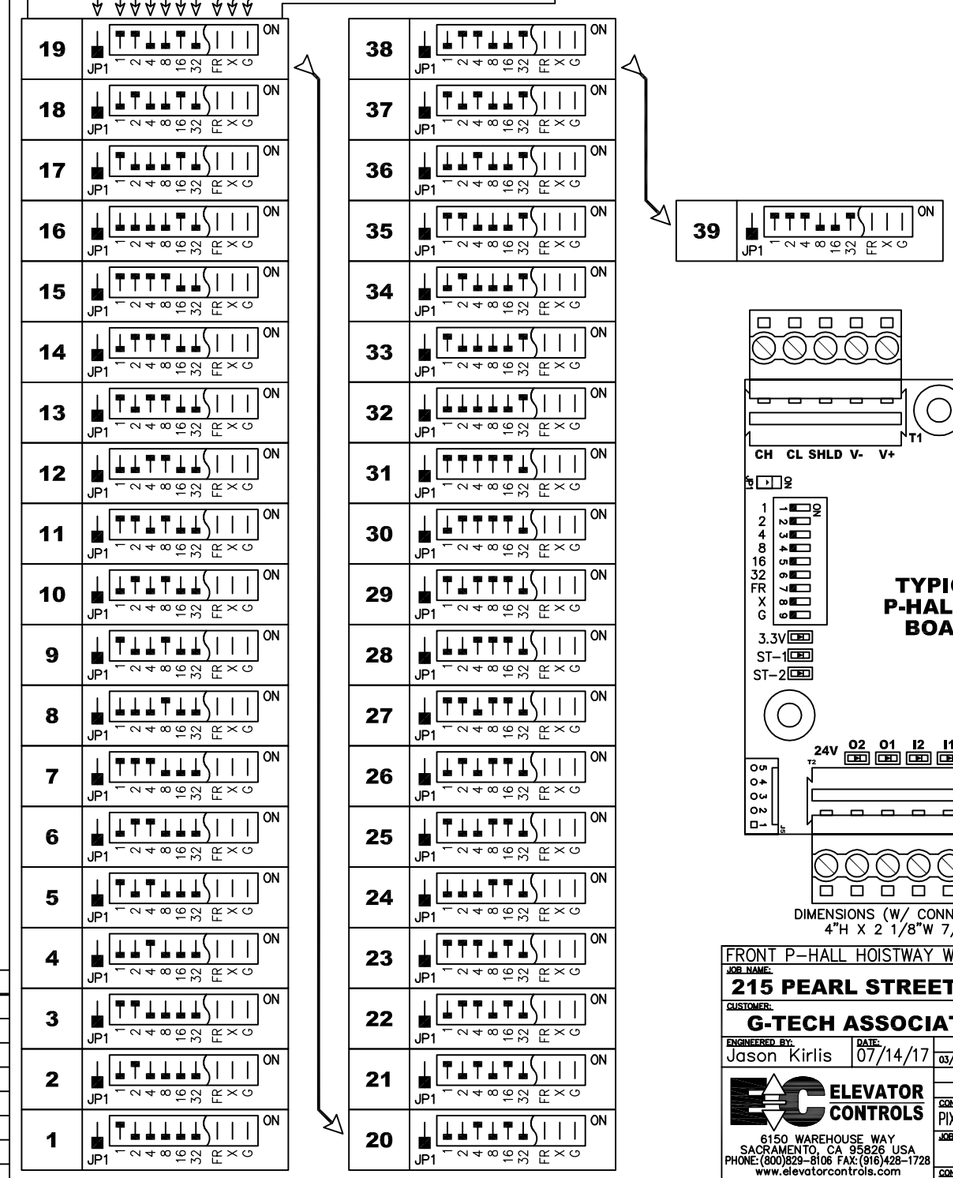

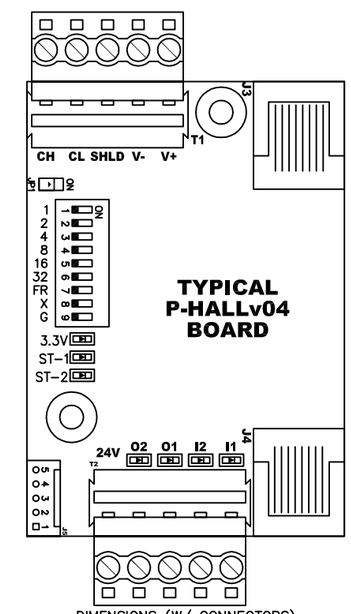

FRONT P-HALL HOISTWAY WIRING DIAGRAMS

JOB NAME: **215 PEARL STREET (R1 & R2)**

CUSTOMER: **G-TECH ASSOCIATES, LLC.**

ENGINEERED BY: Jason Kirlis | DATE: 07/14/17 | REVISION DATE: 03/24/2017 JPK

ELEVATOR CONTROLS
6150 WAREHOUSE WAY
SACRAMENTO, CA 95826 USA
PHONE: (800)829-8106 FAX: (916)428-1728
www.elevatorcontrols.com

CONTROLLER MODEL: PIXEL AC VECTOR-GL-L2

JOB NUMBER: 17-19017

CONTROLLER ID: A | PAGE NUMBER: QR4Z

M_PIXEL-QR4b.dwg 03/24/16
FILE: J19017-A_QR4Z.dwg

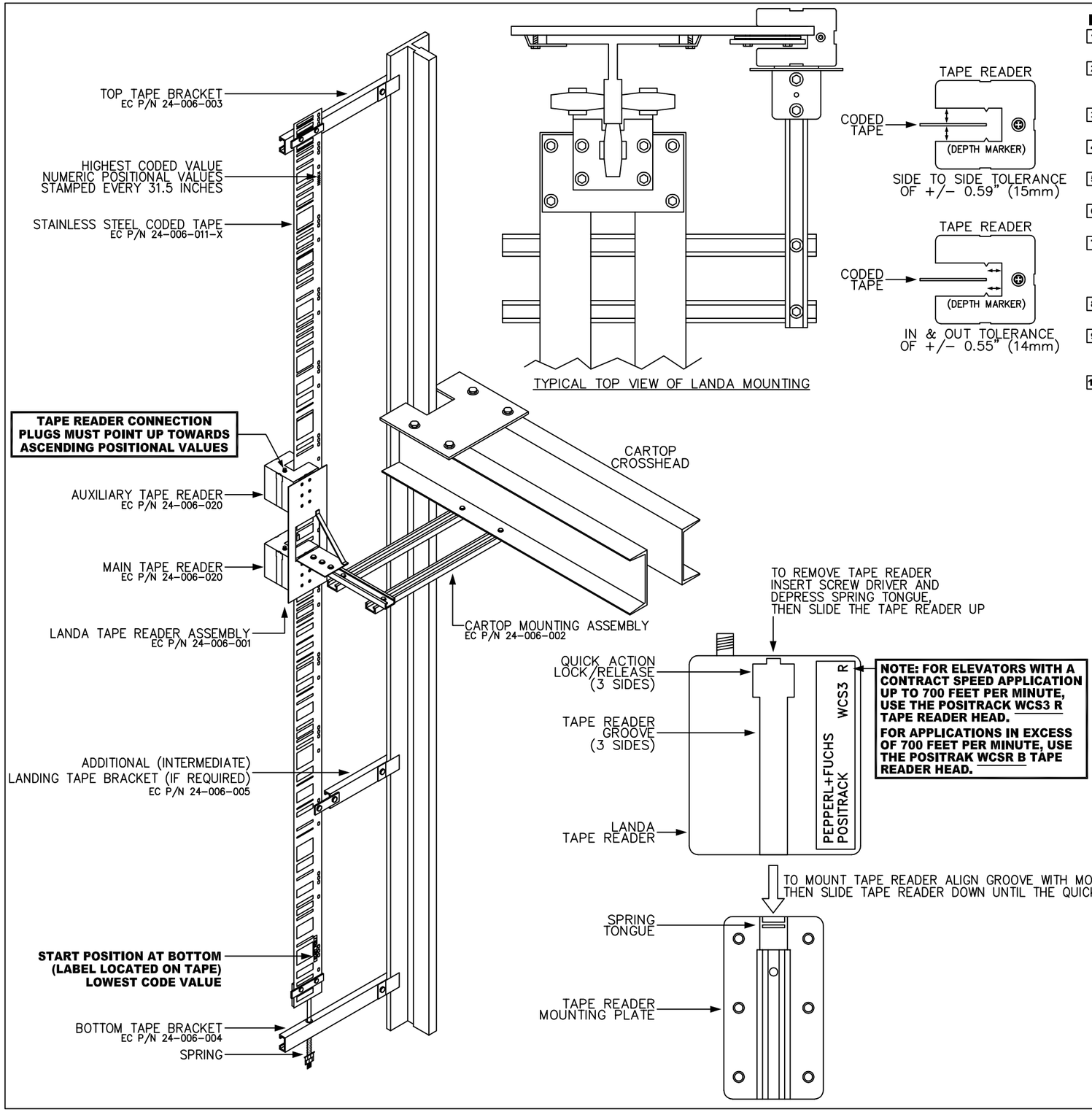

INSTALLATION:

1. ATTACH TOP AND BOTTOM TAPE BRACKETS TO RAIL USING CLIPS AND HARDWARE PROVIDED.
2. HANG STAINLESS STEEL CODED TAPE FROM TAPE BRACKETS. VERIFY START POINT (LOWEST POSITIONAL VALUE) IS AT BOTTOM. THE TAPE HAS POSITIONAL VALUES STAMPED INTO THE TAPE EVERY 31.5 INCHES.
3. ADJUST TAPE BRACKETS SO THE STAINLESS STEEL CODED TAPE IS IN PROPER VERTICAL ALIGNMENT (FRONT TO BACK AND SIDE TO SIDE).
4. ADJUST THE SPRING ON THE BOTTOM TAPE BRACKET TO APPLY TENSION ONTO THE TAPE.
5. MOUNT THE LANDA POSTION SYSTEM ONTO THE CARTOP USING UNISTRUTS AND HARDWARE (TYPICAL MOUNTING SHOWN TO THE LEFT).
6. TAPE READER ORIENTATION CAN BE ADJUSTED BY USING THE QUICK ACTION LOCK/RELEASE FEATURE (SEE PICTURE BELOW)
7. ALIGN TAPE READERS SO THAT THE TAPE IS CENTERED INSIDE READERS WHILE ALIGNED TO DEPTH MARKERS AT ANY POSITION IN THE HOISTWAY. TOLERANCES: +/- 0.59" (15mm) SIDE TO SIDE AND +/- 0.55" (14 mm) IN & OUT FROM CENTER OF TAPE READER.
8. RUN THE CAR FROM TOP TO BOTTOM TO VERIFY THE ABOVE RUNNING TOLERANCES ARE NOT EXCEEDED AND ADJUST ACCORDINGLY.
9. CONNECT THE BOTTOM TAPE READER (MAIN) TO THE P-TOC BOARD JMSEL TERMINALS USING THE LANDA CABLE (EC P/N 24-006-021). TAPE READER PLUG ALWAYS POINTS UP TOWARD ASCENDING POSITION VALUE.
10. CONNECT THE TOP TAPE READER (AUXILIARY) TO THE P-TOC BOARD JASEL TERMINALS USING THE LANDA CABLE (EC P/N 24-006-021). TAPE READER PLUG ALWAYS POINTS UP TOWARD ASCENDING POSITION VALUE..

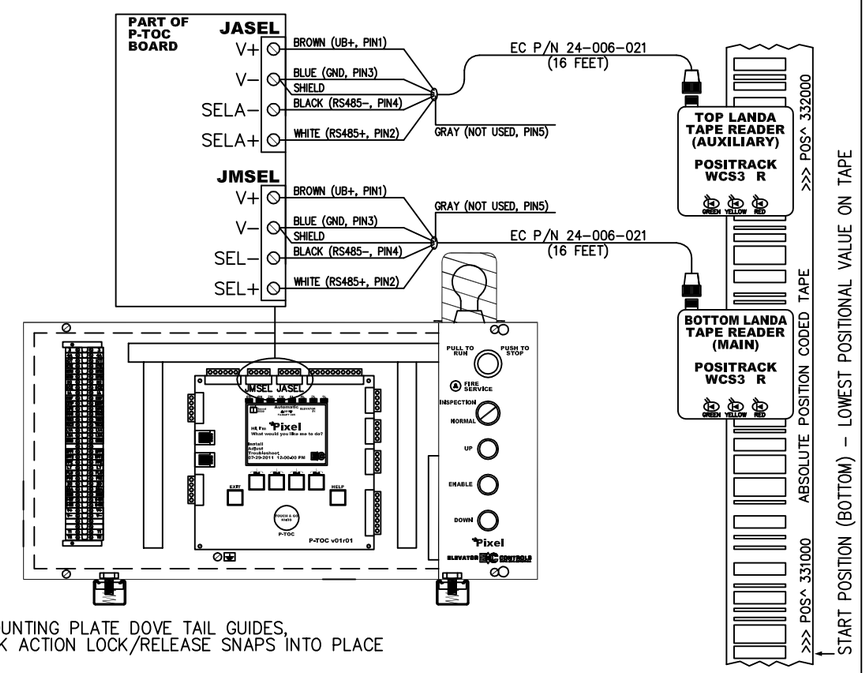

PIXEL INSTALLATION: LANDA POSITION SYSTEM

JOB NAME: **215 PEARL STREET (R1 & R2)**

CUSTOMER: **G-TECH ASSOCIATES, LLC.**

ENGINEERED BY:	DATE:	REVISION DATE:
Jason Kirlis	07/14/17	

ELEVATOR CONTROLS
6150 WAREHOUSE WAY
SACRAMENTO, CA 95826 USA
PHONE:(800)829-8106 FAX:(916)428-1728
www.elevatorcontrols.com

CONTROLLER MODEL: PIXEL AC VECTOR-GL-L2

JOB NUMBER: 17-19017

CONTROLLER ID:	PAGE NUMBER:
A & B	QR5

M_PIXEL-QR5.dwg 01/09/17
FILE: J19017_QR5.dwg

FRONT VIEW

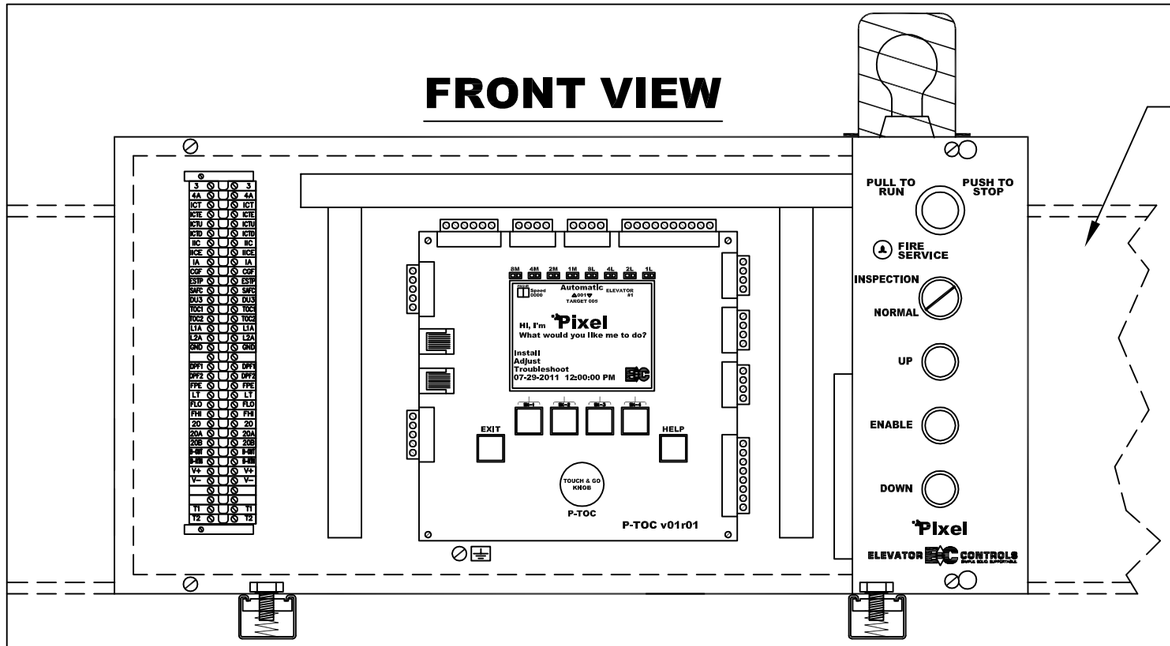

SIDE VIEW

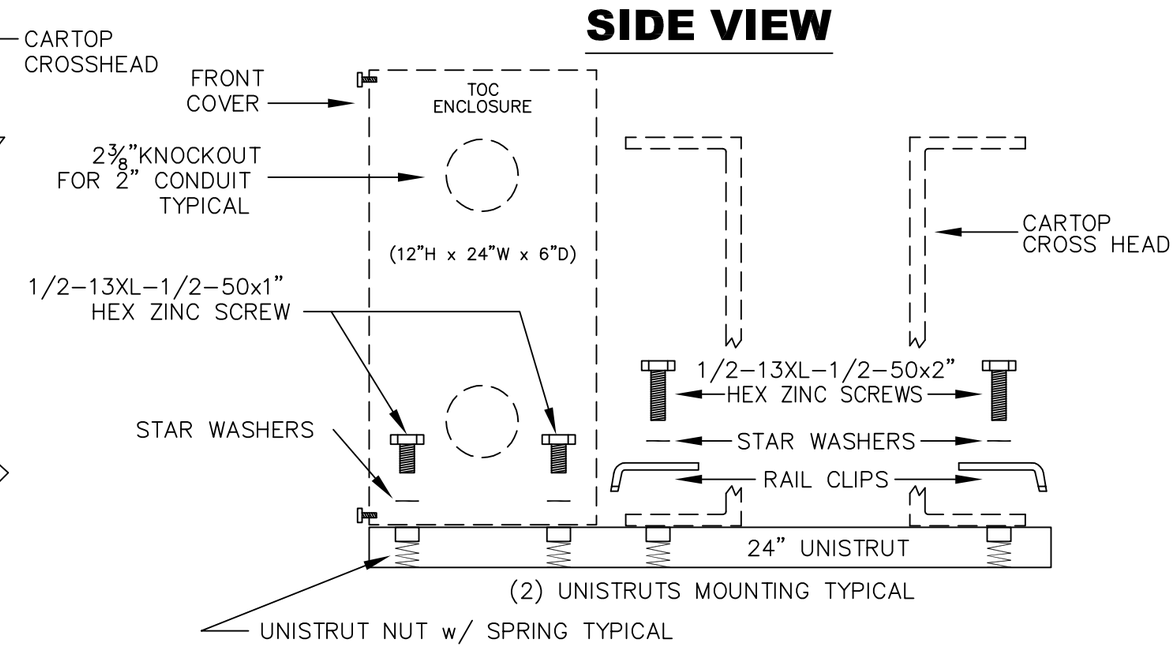

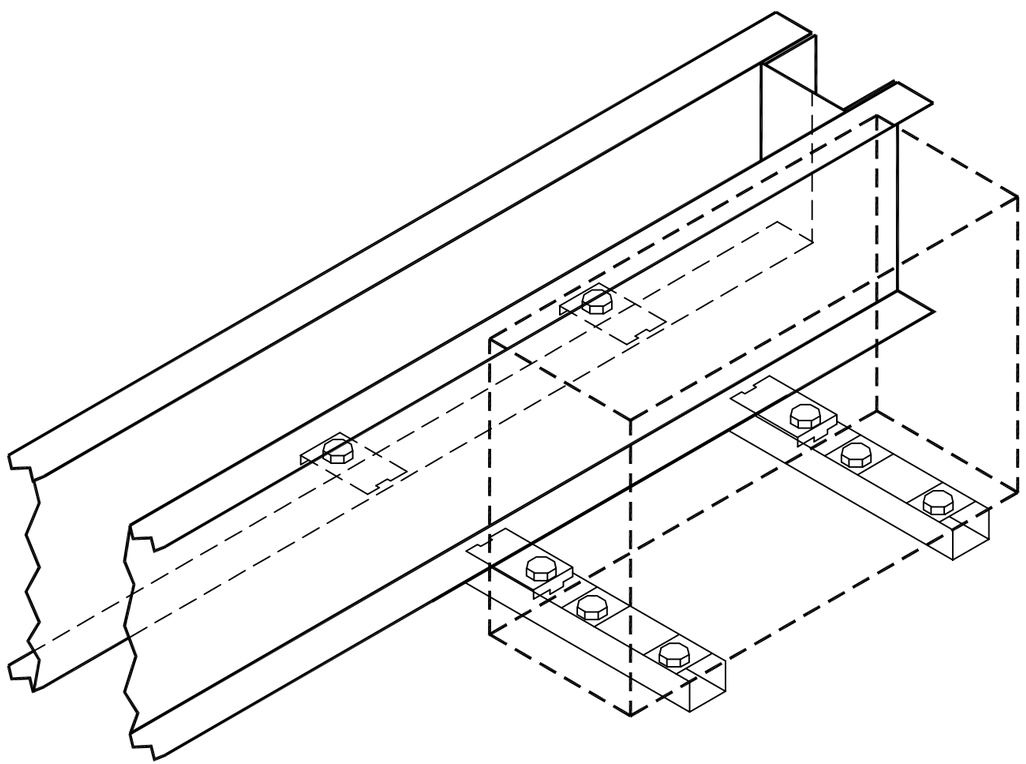

PIXEL TOC (TOP OF CAR) BOX MOUNTING INSTRUCTIONS

1. THE TOC BOX IS TYPICALLY MOUNTED TO THE CARTOP USING THE UNISTRUTS AND RAIL CLIPS (PROVIDED BY ELEVATOR CONTROLS), AS SHOWN IN THIS DIAGRAM. CHOOSE A MOUNTING LOCATION CLOSE TO THE LANDA POSITION SYSTEM (16 FOOT CABLES).
2. IF THIS MOUNTING TECHNIQUE CANNOT BE USED, IT IS UP TO THE INSTALLER TO MOUNT THE CARTOP ASSEMBLY PROPERLY. VERTICAL MOUNTING AS SHOWN, IS PREFERRED. WHEN MOUNTING HORIZONTALLY, CAUTION SHOULD BE TAKEN AGAINST METAL DEBRIS THAT CAN CAUSE ELECTRICAL DAMAGE.
3. SEVERAL KNOCKOUTS HAVE BEEN PROVIDED FOR 2" CONDUIT CONNECTIONS. CONNECT TRAVELING CABLE, SELECTOR, DOOR OPERATOR(S) AND COP USING THESE KNOCKOUTS.

PIXEL INSTALLATION: TOC (TOP OF CAR) BOX MOUNTING

JOB NAME: **215 PEARL STREET (R1 & R2)**

CUSTOMER: **G-TECH ASSOCIATES, LLC.**

ENGINEERED BY: Jason Kirlis | DATE: 07/14/17 | REVISION DATE:

ELEVATOR CONTROLS
6150 WAREHOUSE WAY
SACRAMENTO, CA 95826 USA
PHONE:(800)829-8106 FAX:(916)428-1728
www.elevatorcontrols.com

CONTROLLER MODEL: PIXEL AC VECTOR-GL-L2

JOB NUMBER: 17-19017

CONTROLLER ID: A & B | PAGE NUMBER: QR6

M_PIXEL-QR6.dwg | 03/24/16

FILE: J19017_QR6.dwg

L1000A CLOSED LOOP FLUX VECTOR, PIXEL VECTOR AC FOR PM MOTOR CONTROLLERS

Basic Start-up Procedure

1. Review and become familiar with the Yaskawa L1000A quick start guide, EC manuals and EC schematics

2. Verify all interconnections to the drive & controller are made in accordance with the EC schematic and Yaskawa L1000A quick start guide.

3. Verify the drive parameters marked with an " » " are correct and match the actual motor and job site data.

4. Use the modified constants menu in the drive to verify the EC parameter settings on this sheet. record any parameter changes in the field setting column.

5. AUTO–TUNING a permanent magnet (PM) motor– is a 3 step process, stationary auto tuning, initial magnet pole search and PG encoder offset.

a. Move one of the jumper legs from H1 to HC terminal (two legs are both installed into H1 terminal on the L1000A drive) terminals HC, H1 & H2 are now jumped together to enable drive hardware
b. (Regenerative drive applications only) Set H1–08=F, to disable base block
c. Set C5–01=3 and C5–19=3, to reduce drive response gains
d. If the landa positioning system is not installed, place the controller on construction mode (install menu)
e. Set T2–01 = 1 and enter the required auto–tuning data (refer to E5–02, E1–05, E5–03, E5–04 and F1–01 for data) press the up key until "tuning ready?" is displayed
f. Using controller insp., press both the up & enable buttons continue to press both buttons until auto–tune is complete
g. Press the run key and the keypad will display "tune proceeding" until process is complete = "tune successful"
h. Auto–tuning for initial magnet pole search with T2–01 = 3 repeat steps f & g (above)
i. Rotational or stationary encoder offset auto–tuning:
rotational (preferred method & most accurate)
1) Rotational encoder offset (ropes must be removed)
Set H2–01 = 6 (Drive Ready), allows brake to lift
Set T2–01 = 10 and repeat steps f & g (above)
Set T2–01 = 11 and repeat steps e & f (above)
Restore H2–01 = 50 (Brake Control)
2) Stationary encoder offset
Set T2–01 = 4 and repeat steps f & g (above)
j. Remove jumper from terminal HC and restore C5–01=15, C5–19=15 & (Regenerative drive applications only) Restore H1–08=9.
k. Record encoder offset (E5–11) in field setting column

Rotational auto–tuning notes:
1) If the motor rotates in the opposite direction, change B1–14 from 0 to 1. this switches the phase order to U–W–V.
2) Encoder setup: Rotate the motor and check parameter U1–05 (Speed Feedback). verify the value is positive in the up and negative in the down direction.
change F1–05 from 1 to 0 if the values are reversed.
3) Repeat Auto-Tuning process if either B1-14 or F1-05 or if encoder unit has been changed.

Basic Adjustment Procedure

1. For contract speed calibration refer to section A2.5 of the Pixel traction controller installation and adjustment manual.

2. Contract speed–response and control:
If slow response during acceleration, increase C5–01 then shorten C5–02. If vibration occurs, decrease C5–01 then lengthen C5–02.

3. Starting–response and rollback control:
If rollback occurs after the brake is lifted, increase C5–19 & S3–39 then shorten C5–20. if vibration occurs, decrease C5–19 & S3–39 then lengthen C5–20.
If rollback persists, increase S3–02 in small adjustments. If required increase S3–01 in small adjustments.

4. Stopping–response and control:
If stopping with poor accuracy, check analog pattern, jerk and deceleration rates. Increase S3–03 in small adjustments.
If vibration occurs, decrease S3–03. Increase S1–05 if additional brake engagement time is required.

Saving And Uploading Parameters

After completely setting up the drive parameters, save the values as user–set defaults by setting 02–03 = 1 and pressing the enter key. The display will return to 0.

To restore values saved in user–set defaults (02–03), set A1–03 = 1110 (uploads only the parameters saved in 02–03)

	Number	Parameter Name	Unit	Range	Default	EC Setting	Field Setting	Notes
	A1–01	Access Level Selection	–	0–2	2	2		2=Adv. Access
	A1–02	Control Method Selection	–	0,2,3,7	2	**7**		7=C.L. PM Motor
	b1–01	Speed Reference Selection	–	0–3	0	**2**		2=MOD BUS
	b1–02	Up/Down Command Selection	–	0–3	1	**2**		2=MOD BUS
»	b1–14	Phase Order Selection	–	0–1	0	0		0=U–V–W
	C1–01	Acceleration Ramp 1	SEC	0.00–600.00	1.50	**1.00**		
	C1–02	Deceleration Ramp 1	SEC	0.00–600.00	1.50	**0.20**		
	C1–03	Acceleration Ramp 2	SEC	0.00–600.00	1.50	**0.00**		
	C1–04	Deceleration Ramp 2	SEC	0.00–600.00	1.50	**0.00**		
	C1–09	Fast Stop Ramp	SEC	0.00–600.00	1.50	**0.50**		
	C2–01	Jerk At Accel Start	SEC	0.00–10.00	0.50	**0.00**		
	C2–02	Jerk At Accel End	SEC	0.00–10.00	0.50	**0.00**		
	C2–03	Jerk At Decel Start	SEC	0.00–10.00	0.50	**0.00**		
	C2–04	Jerk At Decel End	SEC	0.00–10.00	0.50	**0.00**		
	C2–05	Jerk Below Leveling Speed	SEC	0.00–10.00	0.50	**0.00**		
	C5–01	Spd Cntrl Lp Proportional Gain 1	–	0.00–300.00	3.00	**15.00**		
	C5–02	Spd Cntrl Lp Integral Time 1	SEC	0.000–10.000	0.30	**0.50**		
	C5–03	Spd Cntrl Lp Proportional Gain 2	–	0.00–300.00	3.00	**15.00**		On if C5–07 > 0
	C5–04	Spd Cntrl Lp Integral Time 2	SEC	0.000–10.000	0.30	**0.50**		On if C5–07 > 0
	C5–06	Spd Cntrl Lp Primary Delay Constant	SEC	0.000–0.500	0.004	**0.100**		
	C5–07	Spd Cntrl Settings Switching Speed	%	0.0–100.0	2	**20.0**		0=Disable C5–03/04
	C5–13	Spd Cntrl Lp Proportional Gain 3	–	0.00–300.00	3.00	**15.00**		On if C5–07 > 0
	C5–14	Spd Cntrl Lp Integral Time 3	SEC	0.000–10.000	0.30	**0.50**		On if C5–07 > 0
	C5–17	Motor Inertia	kgm^2	0.0001–600.00	B	A		
	C5–19	Spd Cntrl Lp Proportional Gain During Position Lock	–	0.00–300.00	10.00	**15.00**		
	C5–20	Spd Cntrl Lp Integral Time During Position Lock	SEC	0.000–10.000	0.10	**0.50**		
	C6–03	Carrier Frequency	kHz	1.0–15.0	B	B		
	C6–06	PWM Method	–	0–2	0	0		0=2/3–PH Conversion
»	E1–01	Input Voltage Setting	V	310–510	460	**480**		
»	E1–04	Maximum Output Frequency	Hz	4.0–120.0	60	**28.5**		
»	E1–05	Maximum Voltage (Motor)	V	256–510	400	**422**		Acceleration voltage
»	E1–06	Base Frequency (Motor)	Hz	0.0–120.0	60	**28.5**		Equal To E1–04
»	E5–02	Motor Rated Power	kW	0.10–650.00	B	**21.11**		kW = HP x 0.746
»	E5–03	Motor Rated Current	A	10–200% Rating	B	**40**		Rating= B
»	E5–04	Number Of Motor Poles	#POLES	2–48	12	**32**		
	E5–05	Motor Stator Resistance (Single Phase)	Ω	0.000–65.000	B	A		
	E5–06	Motor D–axis Inductance	mH	0.00–600.00	B	A		
	E5–07	Motor Q–axis Inductance	mH	0.00–600.00	B	A		
	E5–09	Motor Induction Voltage Constant 1	mV/(rad/SEC)	0.0–6500.0	B	A		
	E5–11	Encoder Offset	DEG	–180–180	0.0	A		
	E5–24	Motor Induction Voltage Constant 2	mV/(r/MIN)	0.0–6500.0	0.0	A		
»	F1–01	Encoder 1 Resolution	PPR	1–60000	2048	**2048**		
	F1–02	Operation Sel. At PG Open Circuit (PGO)	–	0–3	1	**0**		0=Ramp To Stop
	F1–03	Operation Selection At Overspeed	–	0–3	1	**0**		0=Ramp To Stop
	F1–04	Operation Selection At Deviation	–	0–3	3	**0**		0=Ramp To Stop
»	F1–05	Encoder 1 Rotation Direction Selection	–	0,1	1	1		
	F1–10	Excessive Speed Deviation Detection Level	%	0–50	10	**25**		
	F1–19	DV4 Detection Selection	–	0–5000	128	**0**		0=Disabled
	H1–03	Terminal S3 Function Selection	–	Multi–function Digital Inputs	24	**20**		20=Ext Flt Ramp To Stop
	H1–04	Terminal S4 Function Selection	–		14	**F**		F=Not Used
	H1–05	Terminal S5 Function Selection	–		3	**F**		F=Not Used
	H1–06	Terminal S6 Function Selection	–		4	**F**		F=Not Used
	H1–07	Terminal S7 Function Selection	–		5	**15**		15=Fast Stop N.O.
	H1–08	Terminal S8 Function Selection	–		F	F		F=Not Used
	H2–01	Terminal M1–M2 Function Selection (relay)	–	& Digital Outputs	50	50		50=Brake Control
	H2–02	Terminal M3–M4 Function Selection (relay)	–		51	**F**		F=Not Used
	H2–03	Terminal M5–M6 Function Selection (relay)	–		6	**F**		F=Not Used
	H3–02	Torque Compensation	–	0,2,3,14,1F	0	**14**		14=Pre–torque

	Number	Parameter Name	Unit	Range	Default	EC Setting	Field Setting	Notes
	H5–02	Communication Speed Selection	–	0–8	3	**8**		8=115200bps
	H5–11	Communications Enter Function Sel.	–	0,1	0	**1**		1=Enter Not Necessary
	L5–01	Number Of Auto Reset Attempts	–	0–10	0	**2**		
	L5–02	Fault Output Operation During Auto Reset	–	0,1	0	**1**		1=Active
	L6–01	Torque Detection Selection 1	–	0–8	0	**2**		2=oL3 Active During Run
	L6–02	Torque Detection Level 1	%	0–300	150	**250**		
	L7–01	Forward Torque Limit	%	0–300	200	**300**		
	L7–02	Reverse Torque Limit	%	0–300	200	**300**		
	L7–03	Forward Regenerative Torque Limit	%	0–300	200	**300**		
	L7–04	Reverse Regenerative Torque Limit	%	0–300	200	**300**		
	L8–05	Input Phase Loss Protection Selection	–	0–3	1	**0**		0=Disabled
	L8–55	Internal Braking Transistor Protection	–	0,1	B	**0**		0=Disabled
	n8–62	Output Voltage Limit	V	240.0–460.0	400.0	**460**		E1–01 Minus 20v
	o1–03	Digital Operator Display Unit Selection	–	0–6	1	**1**		1=0.01%
	o1–04	V/f Pattern Setting Units	–	0,1	1	**0**		0=Hz, C.L. Only
	o1–12	Length Units	–	0,1	0	**1**		1=Inches
»	o1–20	Traction Sheave Diameter	INCH	3.70–78.00	15.70	**25.00**		
»	o1–21	Roping Ratio	–	1–4	2	**1**		1=1:1
»	o1–22	Mechanical Gear Ratio	–	0.10–50.00	1.00	1.00		
	P1–01	–	–	–	–	**AC**		
	P1–02	–	–	–	–	**26**		
	P1–03	–	–	–	–	**45**		
	P1–04	–	–	–	–	**20**		
	S1–01	Zero Speed Level At Stop	%	0.000–9.999	0.350	0.350		
	S1–04	Position Lock Time At Start	SEC	0.00–10.00	0.40	0.40		
	S1–05	Position Lock Time At Stop	SEC	0.00–10.00	0.60	**1.0**		
	S1–06	Brake Release Delay Time	SEC	0.00–10.00	0.20	**0.00**		
	S1–07	Brake Close Delay Time	SEC	0.00–(S1–05)	0.10	0.10		
	S1–10	Run Command Delay Time	SEC	0.00–1.00	0.10	0.10		
	S3–01	Position Lock Gain At Start 1	–	0–100	5	**15**		
	S3–02	Position Lock Gain At Start 2 (anti–rollback)	–	0.00–100.00	0.00	**15**		
	S3–03	Position Lock Gain At Stop	–	0–100	5	5		
	S3–10	Starting Torque Compensation Increase Time	mSEC	0–5000	500	**200**		
	S3–14	Torque Compensation Fade Out Speed	%	0.0–100%	0.0	0.0		
	S3–16	Torque Limit Reduction Time	mSEC	0–10000	100	**200**		
	S3–27	Torque Compensation Value With Load Condition 1	%	–100%–100%	–50	**-100**		
	S3–28	Torque Compensation Value With Load Condition 2	%	–100%–100%	50	**100**		
	S3–29	Analog Input From Load Cell With Load Condition 1	%	–100%–100%	0	**-100**		
	S3–39	Anti–rollback Integral Gain	–	–30.00–30.00	0.00	0.00		
	S3–40	Anti–rollback Movement Detection	PULSE	0–100	1	1		
	S3–41	Position Lock Gain At Start 2 Reduction	–	0.00–1.00	0.50	0.50		
	S6–11	Overacceleration Detection Time	mSEC	0–5000	50	**500**		

*** Pixel Parameters ***

Speed Profile	
Pattern Delay (ms)	250ms
Ramp To Stop	YES
Releveling Offset (set to 40% Dead Zone)	0.0
Speed Pattern Scaling % (Jobs below 10Hz)	OFF
Motor/Brake Timers	
Brake Pick Delay (s)	0.0s
Brake Drop Delay (s)	0.2s
Zero Speed Hold Delay (s)	2.0s

Parameter Constrain Settings

Pattern Delay > = S1–04
Zero Speed Hold > S1–05 + S3–16
S1–04 > S3–10, and S1–05 > Brake Drop Delay
Zero Speed Hold > Brake Drop Delay

A Parameter Is Modified During Auto–tuning Process
B o2–04 (Drive Model Selection) Dependent Parameters

VVVF YASKAWA L1000A DRIVE PARAMETER LIST

JOB NAME: **215 PEARL STREET (R1 & R2)**

CUSTOMER: **G-TECH ASSOCIATES, LLC.**

ENGINEERED BY: Jason Kirlis | DATE: 07/14/17 | REVISION DATE:

ELEVATOR CONTROLS
6150 WAREHOUSE WAY
SACRAMENTO, CA 95826 USA
PHONE:(800)829–8106 FAX:(916)428–1728
www.elevatorcontrols.com

CONTROLLER MODEL: PIXEL AC VECTOR–GL–L2

JOB NUMBER: 17–19017

CONTROLLER ID: A | PAGE NUMBER: QR7

M_PIXEL–QR7_L1000A.dwg | 06/15/17
FILE: J19017–A_QR7.dwg

L1000A CLOSED LOOP FLUX VECTOR, PIXEL VECTOR AC FOR PM MOTOR CONTROLLERS

Basic Start-up Procedure

1. Review and become familiar with the Yaskawa L1000A quick start guide, EC manuals and EC schematics

2. Verify all interconnections to the drive & controller are made in accordance with the EC schematic and Yaskawa L1000A quick start guide.

3. Verify the drive parameters marked with an " » " are correct and match the actual motor and job site data.

4. Use the modified constants menu in the drive to verify the EC parameter settings on this sheet. record any parameter changes in the field setting column.

5. AUTO–TUNING a permanent magnet (PM) motor– is a 3 step process, stationary auto tuning, initial magnet pole search and PG encoder offset.

a. Move one of the jumper legs from H1 to HC terminal (two legs are both installed into H1 terminal on the L1000A drive) terminals HC, H1 & H2 are now jumped together to enable drive hardware
b. (Regenerative drive applications only) Set H1–08=F, to disable base block
c. Set C5–01=3 and C5–19=3, to reduce drive response gains
d. If the landa positioning system is not installed, place the controller on construction mode (install menu)
e. Set T2–01 = 1 and enter the required auto–tuning data (refer to E5–02, E1–05, E5–03, E5–04 and F1–01 for data) press the up key until "tuning ready?" is displayed
f. Using controller insp., press both the up & enable buttons continue to press both buttons until auto–tune is complete
g. Press the run key and the keypad will display "tune proceeding" until process is complete = "tune successful"
h. Auto–tuning for initial magnet pole search with T2–01 = 3 repeat steps f & g (above)
i. Rotational or stationary encoder offset auto–tuning:
rotational (preferred method & most accurate)
1) Rotational encoder offset (ropes must be removed)
Set H2–01 = 6 (Drive Ready), allows brake to lift
Set T2–01 = 10 and repeat steps f & g (above)
Set T2–01 = 11 and repeat steps e & f (above)
Restore H2–01 = 50 (Brake Control)
2) Stationary encoder offset
Set T2–01 = 4 and repeat steps f & g (above)
j. Remove jumper from terminal HC and restore C5–01=15, C5–19=15 & (Regenerative drive applications only) Restore H1–08=9.
k. Record encoder offset (E5–11) in field setting column

Rotational auto–tuning notes:
1) If the motor rotates in the opposite direction, change B1–14 from 0 to 1. this switches the phase order to U–W–V.
2) Encoder setup: Rotate the motor and check parameter U1–05 (Speed Feedback). verify the value is positive in the up and negative in the down direction.
change F1–05 from 1 to 0 if the values are reversed.
3) Repeat Auto-Tuning process if either B1-14 or F1-05 or if encoder unit has been changed.

Basic Adjustment Procedure

1. For contract speed calibration refer to section A2.5 of the Pixel traction controller installation and adjustment manual.

2. Contract speed–response and control:
If slow response during acceleration, increase C5–01 then shorten C5–02. If vibration occurs, decrease C5–01 then lengthen C5–02.

3. Starting–response and rollback control:
If rollback occurs after the brake is lifted, increase C5–19 & S3–39 then shorten C5–20. if vibration occurs, decrease C5–19 & S3–39 then lengthen C5–20.
If rollback persists, increase S3–02 in small adjustments. If required increase S3–01 in small adjustments.

4. Stopping–response and control:
If stopping with poor accuracy, check analog pattern, jerk and deceleration rates. Increase S3–03 in small adjustments.
If vibration occurs, decrease S3–03. Increase S1–05 if additional brake engagement time is required.

Saving And Uploading Parameters

After completely setting up the drive parameters, save the values as user–set defaults by setting 02–03 = 1 and pressing the enter key. The display will return to 0.

To restore values saved in user–set defaults (02–03), set A1–03 = 1110 (uploads only the parameters saved in 02–03)

	Number	Parameter Name	Unit	Range	Default	EC Setting	Field Setting	Notes
	A1–01	Access Level Selection	–	0–2	2	2		2=Adv. Access
	A1–02	Control Method Selection	–	0,2,3,7	2	**7**		7=C.L. PM Motor
	b1–01	Speed Reference Selection	–	0–3	0	**2**		2=MOD BUS
	b1–02	Up/Down Command Selection	–	0–3	1	**2**		2=MOD BUS
»	b1–14	Phase Order Selection	–	0–1	0	0		0=U–V–W
	C1–01	Acceleration Ramp 1	SEC	0.00–600.00	1.50	**1.00**		
	C1–02	Deceleration Ramp 1	SEC	0.00–600.00	1.50	**0.20**		
	C1–03	Acceleration Ramp 2	SEC	0.00–600.00	1.50	**0.00**		
	C1–04	Deceleration Ramp 2	SEC	0.00–600.00	1.50	**0.00**		
	C1–09	Fast Stop Ramp	SEC	0.00–600.00	1.50	**0.50**		
	C2–01	Jerk At Accel Start	SEC	0.00–10.00	0.50	**0.00**		
	C2–02	Jerk At Accel End	SEC	0.00–10.00	0.50	**0.00**		
	C2–03	Jerk At Decel Start	SEC	0.00–10.00	0.50	**0.00**		
	C2–04	Jerk At Decel End	SEC	0.00–10.00	0.50	**0.00**		
	C2–05	Jerk Below Leveling Speed	SEC	0.00–10.00	0.50	**0.00**		
	C5–01	Spd Cntrl Lp Proportional Gain 1	–	0.00–300.00	3.00	**15.00**		
	C5–02	Spd Cntrl Lp Integral Time 1	SEC	0.000–10.000	0.30	**0.50**		
	C5–03	Spd Cntrl Lp Proportional Gain 2	–	0.00–300.00	3.00	**15.00**		On if C5–07 > 0
	C5–04	Spd Cntrl Lp Integral Time 2	SEC	0.000–10.000	0.30	**0.50**		On if C5–07 > 0
	C5–06	Spd Cntrl Lp Primary Delay Constant	SEC	0.000–0.500	0.004	**0.100**		
	C5–07	Spd Cntrl Settings Switching Speed	%	0.0–100.0	2	**20.0**		0=Disable C5–03/04
	C5–13	Spd Cntrl Lp Proportional Gain 3	–	0.00–300.00	3.00	**15.00**		On if C5–07 > 0
	C5–14	Spd Cntrl Lp Integral Time 3	SEC	0.000–10.000	0.30	**0.50**		On if C5–07 > 0
	C5–17	Motor Inertia	kgm^2	0.0001–600.00	B	A		
	C5–19	Spd Cntrl Lp Proportional Gain During Position Lock	–	0.00–300.00	10.00	**15.00**		
	C5–20	Spd Cntrl Lp Integral Time During Position Lock	SEC	0.000–10.000	0.10	**0.50**		
	C6–03	Carrier Frequency	kHz	1.0–15.0	B	B		
	C6–06	PWM Method	–	0–2	0	0		0=2/3–PH Conversion
»	E1–01	Input Voltage Setting	V	310–510	460	**480**		
»	E1–04	Maximum Output Frequency	Hz	4.0–120.0	60	**28.5**		
»	E1–05	Maximum Voltage (Motor)	V	256–510	400	**422**		Acceleration voltage
»	E1–06	Base Frequency (Motor)	Hz	0.0–120.0	60	**28.5**		Equal To E1–04
»	E5–02	Motor Rated Power	kW	0.10–650.00	B	**26.41**		kW = HP x 0.746
»	E5–03	Motor Rated Current	A	10–200% Rating	B	**50**		Rating= B
»	E5–04	Number Of Motor Poles	#POLES	2–48	12	**32**		
	E5–05	Motor Stator Resistance (Single Phase)	Ω	0.000–65.000	B	A		
	E5–06	Motor D–axis Inductance	mH	0.00–600.00	B	A		
	E5–07	Motor Q–axis Inductance	mH	0.00–600.00	B	A		
	E5–09	Motor Induction Voltage Constant 1	mV/(rad/SEC)	0.0–6500.0	B	A		
	E5–11	Encoder Offset	DEG	–180–180	0.0	A		
	E5–24	Motor Induction Voltage Constant 2	mV/(r/MIN)	0.0–6500.0	0.0	A		
»	F1–01	Encoder 1 Resolution	PPR	1–60000	2048	**2048**		
	F1–02	Operation Sel. At PG Open Circuit (PGO)	–	0–3	1	**0**		0=Ramp To Stop
	F1–03	Operation Selection At Overspeed	–	0–3	1	**0**		0=Ramp To Stop
	F1–04	Operation Selection At Deviation	–	0–3	3	**0**		0=Ramp To Stop
»	F1–05	Encoder 1 Rotation Direction Selection	–	0,1	1	1		
	F1–10	Excessive Speed Deviation Detection Level	%	0–50	10	**25**		
	F1–19	DV4 Detection Selection	–	0–5000	128	**0**		0=Disabled
	H1–03	Terminal S3 Function Selection	–	Multi–function Digital Inputs	24	**20**		20=Ext Flt Ramp To Stop
	H1–04	Terminal S4 Function Selection	–		14	**F**		F=Not Used
	H1–05	Terminal S5 Function Selection	–		3	**F**		F=Not Used
	H1–06	Terminal S6 Function Selection	–		4	**F**		F=Not Used
	H1–07	Terminal S7 Function Selection	–		5	**15**		15=Fast Stop N.O.
	H1–08	Terminal S8 Function Selection	–		F	F		F=Not Used
	H2–01	Terminal M1–M2 Function Selection (relay)	–	& Digital Outputs	50	50		50=Brake Control
	H2–02	Terminal M3–M4 Function Selection (relay)	–		51	**F**		F=Not Used
	H2–03	Terminal M5–M6 Function Selection (relay)	–		6	**F**		F=Not Used
	H3–02	Torque Compensation	–	0,2,3,14,1F	0	**14**		14=Pre–torque

	Number	Parameter Name	Unit	Range	Default	EC Setting	Field Setting	Notes
	H5–02	Communication Speed Selection	–	0–8	3	**8**		8=115200bps
	H5–11	Communications Enter Function Sel.	–	0,1	0	**1**		1=Enter Not Necessary
	L5–01	Number Of Auto Reset Attempts	–	0–10	0	**2**		
	L5–02	Fault Output Operation During Auto Reset	–	0,1	0	**1**		1=Active
	L6–01	Torque Detection Selection 1	–	0–8	0	**2**		2=oL3 Active During Run
	L6–02	Torque Detection Level 1	%	0–300	150	**250**		
	L7–01	Forward Torque Limit	%	0–300	200	**300**		
	L7–02	Reverse Torque Limit	%	0–300	200	**300**		
	L7–03	Forward Regenerative Torque Limit	%	0–300	200	**300**		
	L7–04	Reverse Regenerative Torque Limit	%	0–300	200	**300**		
	L8–05	Input Phase Loss Protection Selection	–	0–3	1	**0**		0=Disabled
	L8–55	Internal Braking Transistor Protection	–	0,1	B	**0**		0=Disabled
	n8–62	Output Voltage Limit	V	240.0–460.0	400.0	**460**		E1–01 Minus 20v
	o1–03	Digital Operator Display Unit Selection	–	0–6	1	**1**		1=0.01%
	o1–04	V/f Pattern Setting Units	–	0,1	1	**0**		0=Hz, C.L. Only
	o1–12	Length Units	–	0,1	0	**1**		1=Inches
»	o1–20	Traction Sheave Diameter	INCH	3.70–78.00	15.70	**25.00**		
»	o1–21	Roping Ratio	–	1–4	2	**1**		1=1:1
»	o1–22	Mechanical Gear Ratio	–	0.10–50.00	1.00	1.00		
	P1–01	–	–	–	–	**AC**		
	P1–02	–	–	–	–	**26**		
	P1–03	–	–	–	–	**45**		
	P1–04	–	–	–	–	**20**		
	S1–01	Zero Speed Level At Stop	%	0.000–9.999	0.350	0.350		
	S1–04	Position Lock Time At Start	SEC	0.00–10.00	0.40	0.40		
	S1–05	Position Lock Time At Stop	SEC	0.00–10.00	0.60	**1.0**		
	S1–06	Brake Release Delay Time	SEC	0.00–10.00	0.20	**0.00**		
	S1–07	Brake Close Delay Time	SEC	0.00–(S1–05)	0.10	0.10		
	S1–10	Run Command Delay Time	SEC	0.00–1.00	0.10	0.10		
	S3–01	Position Lock Gain At Start 1	–	0–100	5	**15**		
	S3–02	Position Lock Gain At Start 2 (anti–rollback)	–	0.00–100.00	0.00	**15**		
	S3–03	Position Lock Gain At Stop	–	0–100	5	5		
	S3–10	Starting Torque Compensation Increase Time	mSEC	0–5000	500	**200**		
	S3–14	Torque Compensation Fade Out Speed	%	0.0–100%	0.0	0.0		
	S3–16	Torque Limit Reduction Time	mSEC	0–10000	100	**200**		
	S3–27	Torque Compensation Value With Load Condition 1	%	–100%–100%	–50	**-100**		
	S3–28	Torque Compensation Value With Load Condition 2	%	–100%–100%	50	**100**		
	S3–29	Analog Input From Load Cell With Load Condition 1	%	–100%–100%	0	**-100**		
	S3–39	Anti–rollback Integral Gain	–	–30.00–30.00	0.00	0.00		
	S3–40	Anti–rollback Movement Detection	PULSE	0–100	1	1		
	S3–41	Position Lock Gain At Start 2 Reduction	–	0.00–1.00	0.50	0.50		
	S6–11	Overacceleration Detection Time	mSEC	0–5000	50	**500**		

*** Pixel Parameters ***

Speed Profile	
Pattern Delay (ms)	250ms
Ramp To Stop	YES
Releveling Offset (set to 40% Dead Zone)	0.0
Speed Pattern Scaling % (Jobs below 10Hz)	OFF
Motor/Brake Timers	
Brake Pick Delay (s)	0.0s
Brake Drop Delay (s)	0.2s
Zero Speed Hold Delay (s)	2.0s

Parameter Constrain Settings

Pattern Delay > = S1–04
Zero Speed Hold > S1–05 + S3–16
S1–04 > S3–10, and S1–05 > Brake Drop Delay
Zero Speed Hold > Brake Drop Delay

A Parameter Is Modified During Auto–tuning Process
B o2–04 (Drive Model Selection) Dependent Parameters

VVVF YASKAWA L1000A DRIVE PARAMETER LIST

JOB NAME: **215 PEARL STREET (R1 & R2)**

CUSTOMER: **G-TECH ASSOCIATES, LLC.**

ENGINEERED BY: Jason Kirlis | DATE: 07/14/17 | REVISION DATE:

ELEVATOR CONTROLS
6150 WAREHOUSE WAY
SACRAMENTO, CA 95826 USA
PHONE:(800)829–8106 FAX:(916)428–1728
www.elevatorcontrols.com

CONTROLLER MODEL: PIXEL AC VECTOR–GL–L2
JOB NUMBER: 17–19017
CONTROLLER ID: B | PAGE NUMBER: QR7

M_PIXEL–QR7_L1000A.dwg | 06/15/17
FILE: J19017–B_QR7.dwg

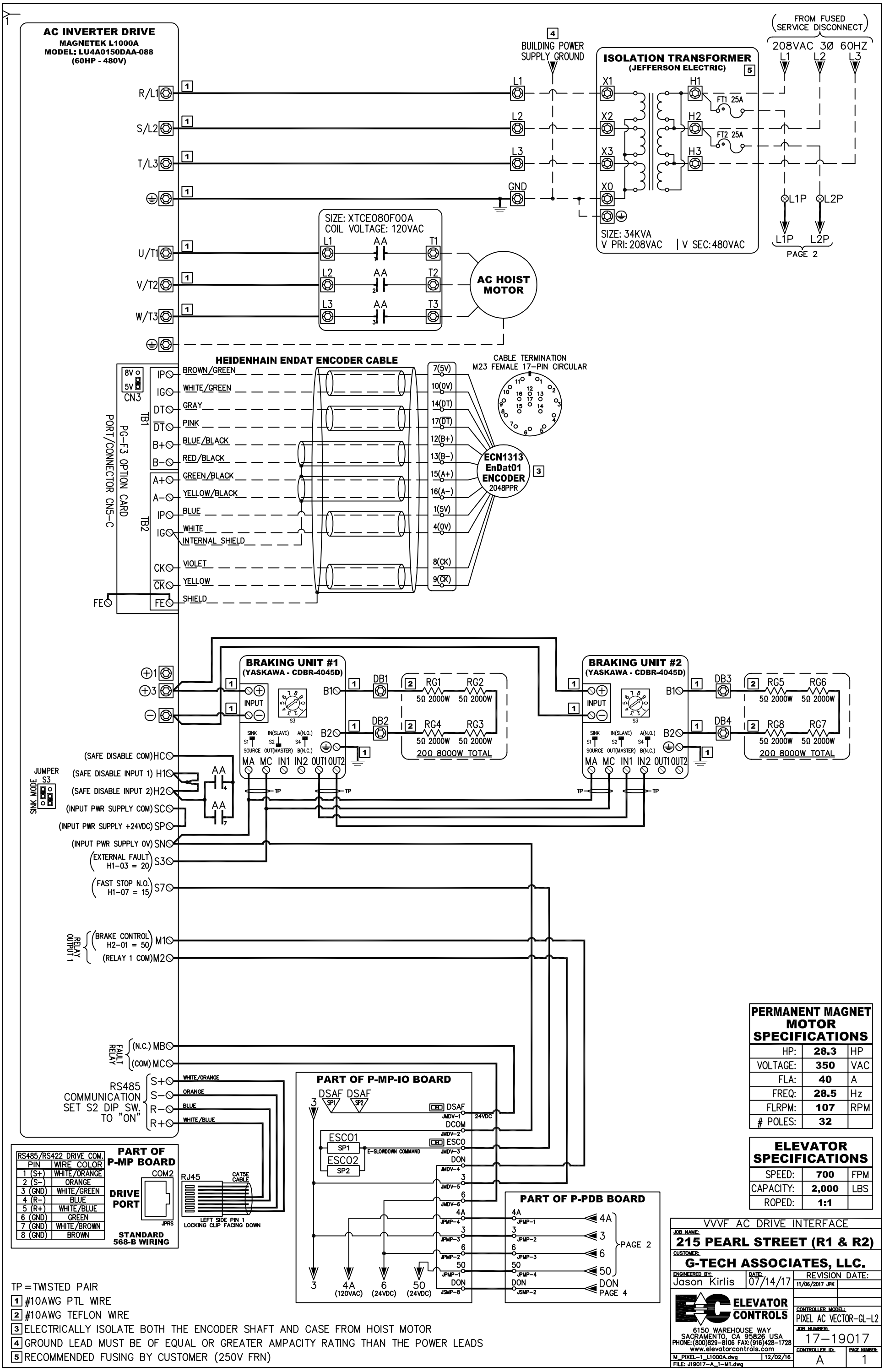

RS485/RS422 DRIVE COM.	
PIN	WIRE COLOR
1 (S+)	WHITE/ORANGE
2 (S-)	ORANGE
3 (GND)	WHITE/GREEN
4 (R-)	BLUE
5 (R+)	WHITE/BLUE
6 (GND)	GREEN
7 (GND)	WHITE/BROWN
8 (GND)	BROWN

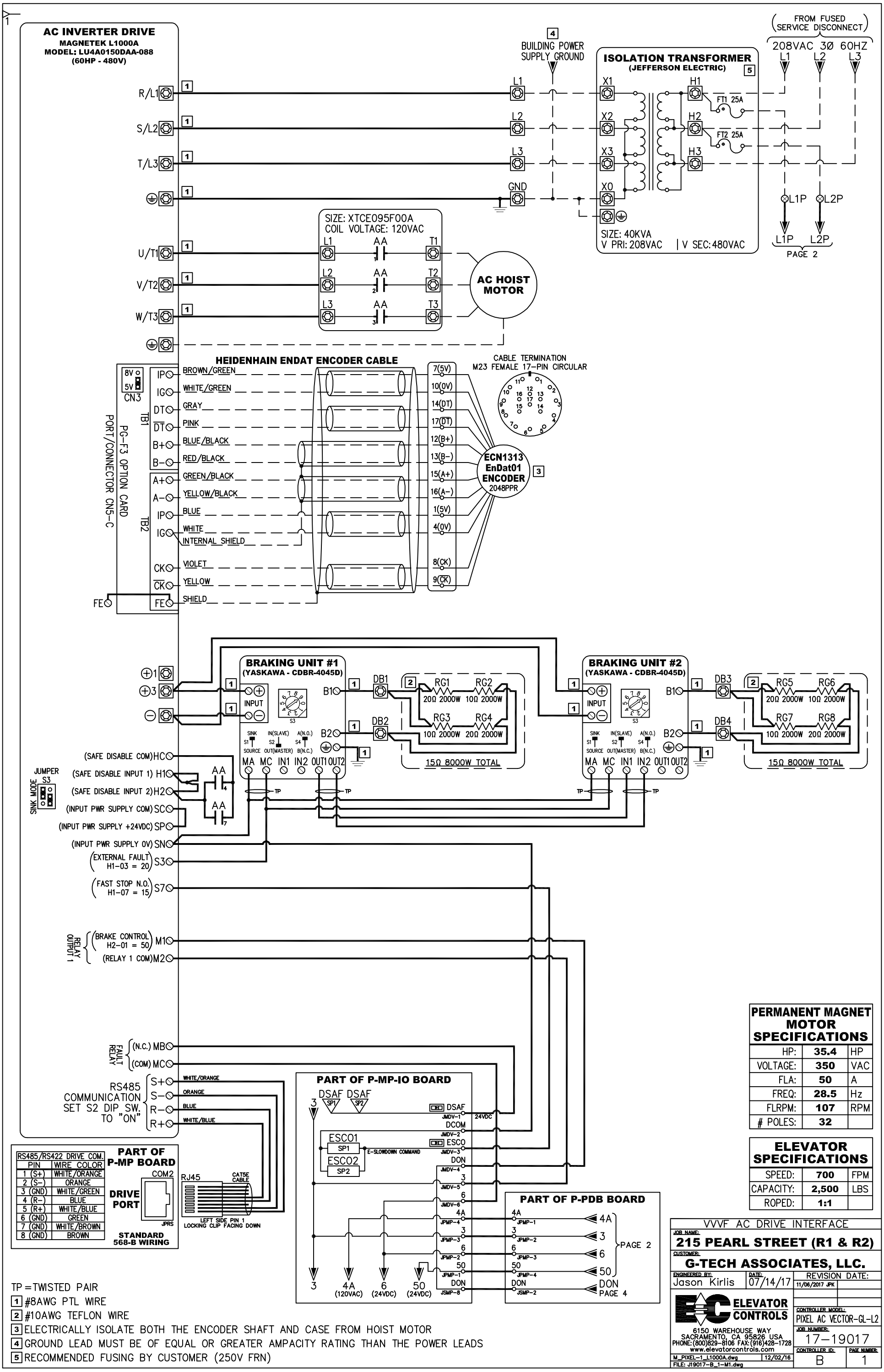

RS485/RS422 DRIVE COM.	
PIN	WIRE COLOR
1 (S+)	WHITE/ORANGE
2 (S-)	ORANGE
3 (GND)	WHITE/GREEN
4 (R-)	BLUE
5 (R+)	WHITE/BLUE
6 (GND)	GREEN
7 (GND)	WHITE/BROWN
8 (GND)	BROWN

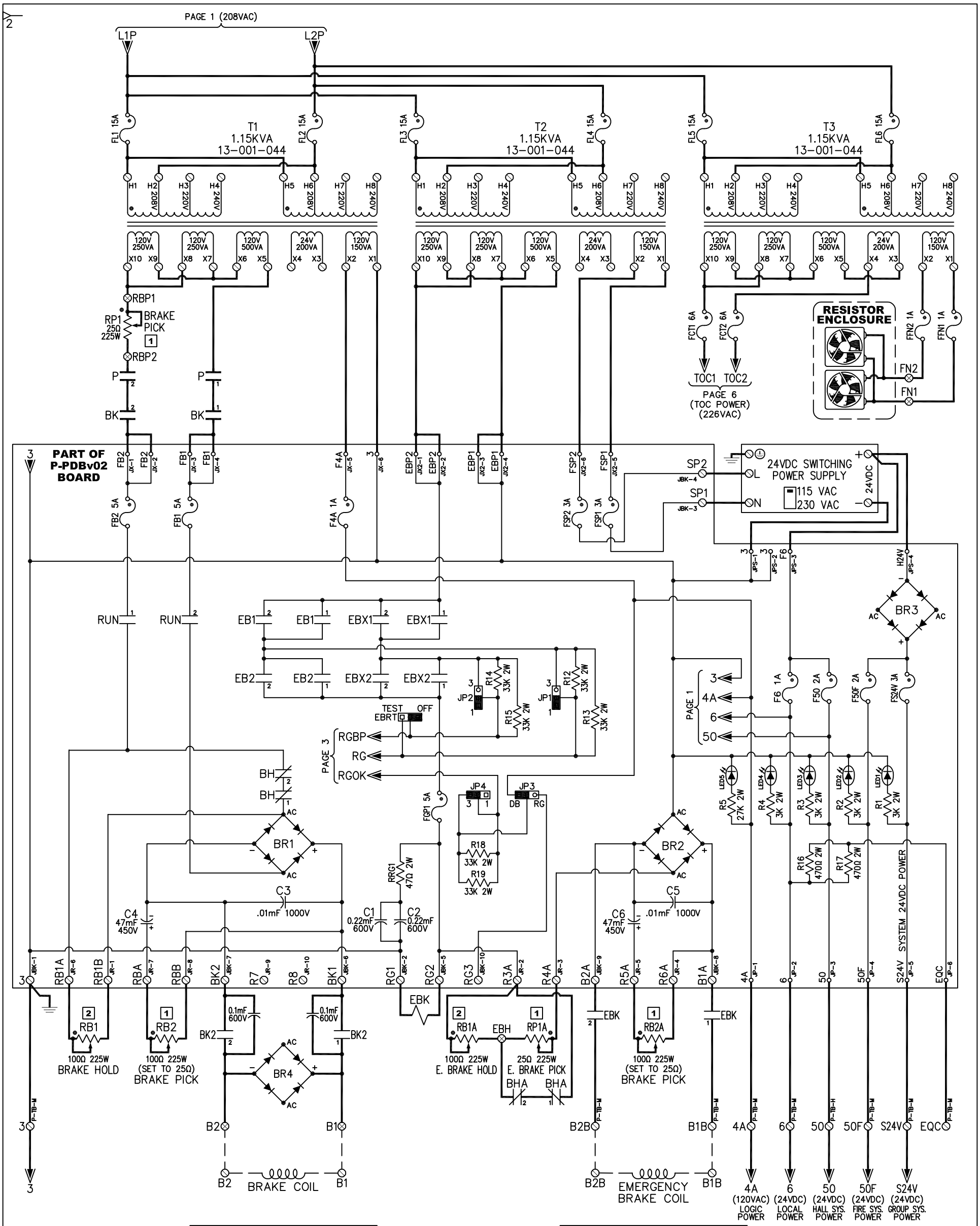

BRAKE SPECIFICATIONS			
BRAKE PICK V:	**230**	VDC	(3.77A)
BRAKE HOLD V:	**100**	VDC	(1.64A)
BRAKE RESIST:	**61**	Ω	

EMERGENCY BRAKE SPECIFICATIONS			
BRAKE PICK V:	**230**	VDC	(3.77A)
BRAKE HOLD V:	**100**	VDC	(1.64A)
BRAKE RESIST:	**61**	Ω	

1 ADJUST RP1(A) FIRST, THEN IF NECESSARY ADJUST RB2(A) FOR PROPER BRAKE PICKING VOLTAGE

2 ADJUST RB1(A) FOR PROPER BRAKE HOLDING VOLTAGE

FUSE LIST

FUSE TYPE	FUSES																	
500V FNQ	FL1	FL2	FL3	FL4	FL5	FL6												
250V MDA	FCT1	FCT2	FSP1	FSP2	FB1	FB2	FGP1	FS24V	FFN1	FFN2								
250V AGC	ALL OTHERS																	

CONTROLLER POWER, BRAKE & EMERGENCY BRAKE

JOB NAME: **215 PEARL STREET (R1 & R2)**

CUSTOMER: **G-TECH ASSOCIATES, LLC.**

ENGINEERED BY: Jason Kirlis | DATE: 07/14/17 | REVISION DATE: 11/06/2017 JPK

ELEVATOR CONTROLS
6150 WAREHOUSE WAY
SACRAMENTO, CA 95826 USA
PHONE: (800)829-8106 FAX: (916)428-1728
www.elevatorcontrols.com

CONTROLLER MODEL: PIXEL AC VECTOR-GL-L2

JOB NUMBER: 17-19017

M_PIXEL-2.dwg 05/12/17

FILE: J19017-A_2-M1.dwg

CONTROLLER ID: A | PAGE NUMBER: 2

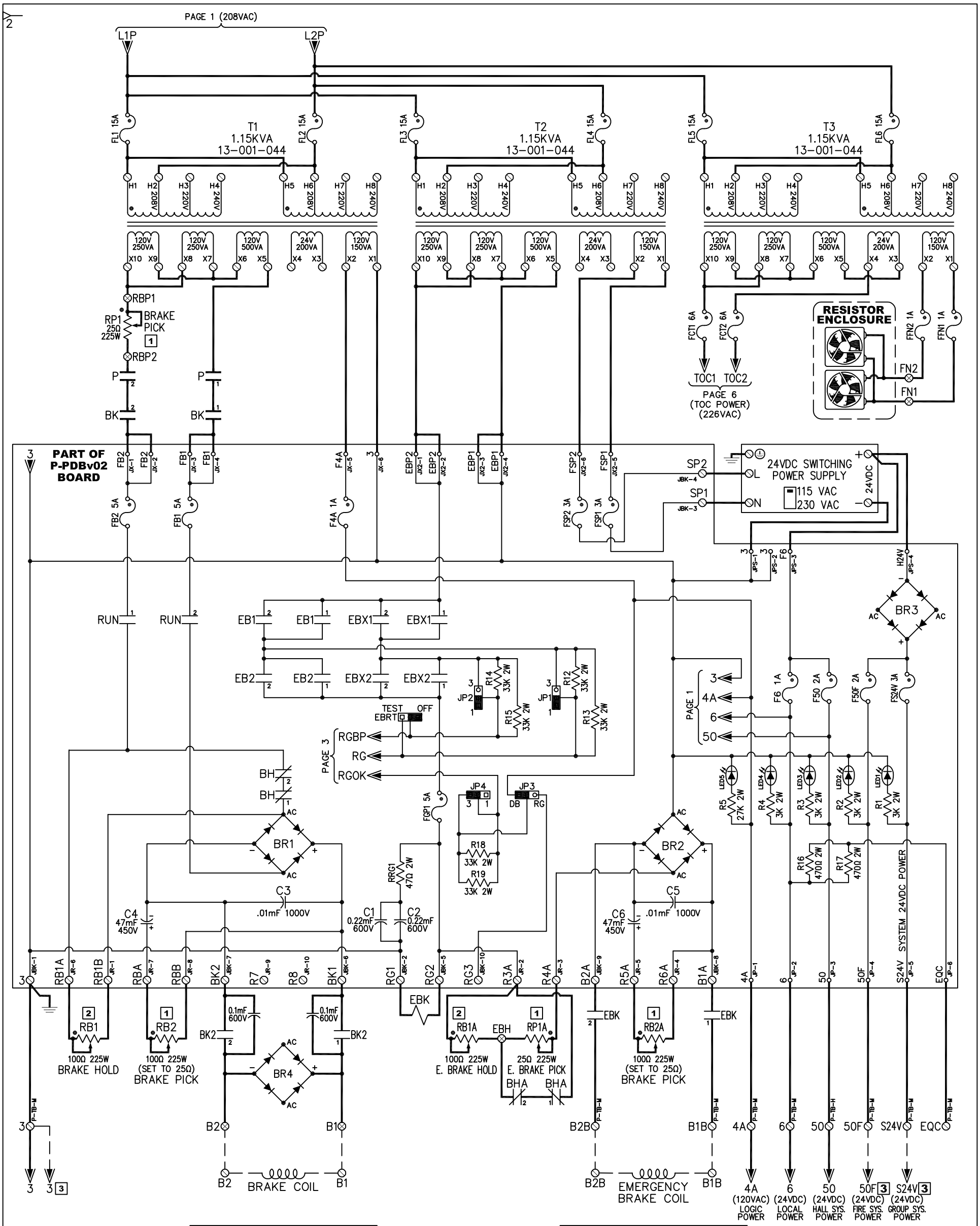

BRAKE SPECIFICATIONS			
BRAKE PICK V:	**230**	VDC	(3.77A)
BRAKE HOLD V:	**100**	VDC	(1.64A)
BRAKE RESIST:	**61**	Ω	

EMERGENCY BRAKE SPECIFICATIONS			
BRAKE PICK V:	**230**	VDC	(3.77A)
BRAKE HOLD V:	**100**	VDC	(1.64A)
BRAKE RESIST:	**61**	Ω	

1 ADJUST RP1(A) FIRST, THEN IF NECESSARY ADJUST RB2(A) FOR PROPER BRAKE PICKING VOLTAGE

2 ADJUST RB1(A) FOR PROPER BRAKE HOLDING VOLTAGE

3 TERMINAL LOCATED IN CAR A CABINET

FUSE LIST

FUSE TYPE	FUSES																	
500V FNQ	FL1	FL2	FL3	FL4	FL5	FL6												
250V MDA	FCT1	FCT2	FSP1	FSP2	FB1	FB2	FGP1	FS24V	FFN1	FFN2								
250V AGC	ALL OTHERS																	

CONTROLLER POWER, BRAKE & EMERGENCY BRAKE

JOB NAME: **215 PEARL STREET (R1 & R2)**

CUSTOMER: **G-TECH ASSOCIATES, LLC.**

ENGINEERED BY: Jason Kirlis | DATE: 07/14/17 | REVISION DATE: 11/06/2017 JPK

ELEVATOR CONTROLS
6150 WAREHOUSE WAY
SACRAMENTO, CA 95826 USA
PHONE: (800)829-8106 FAX: (916)428-1728
www.elevatorcontrols.com

CONTROLLER MODEL: PIXEL AC VECTOR-GL-L2

JOB NUMBER: 17-19017

M_PIXEL-2.dwg 05/12/17

FILE: J19017-B_2-M1.dwg

CONTROLLER ID: B | PAGE NUMBER: 2

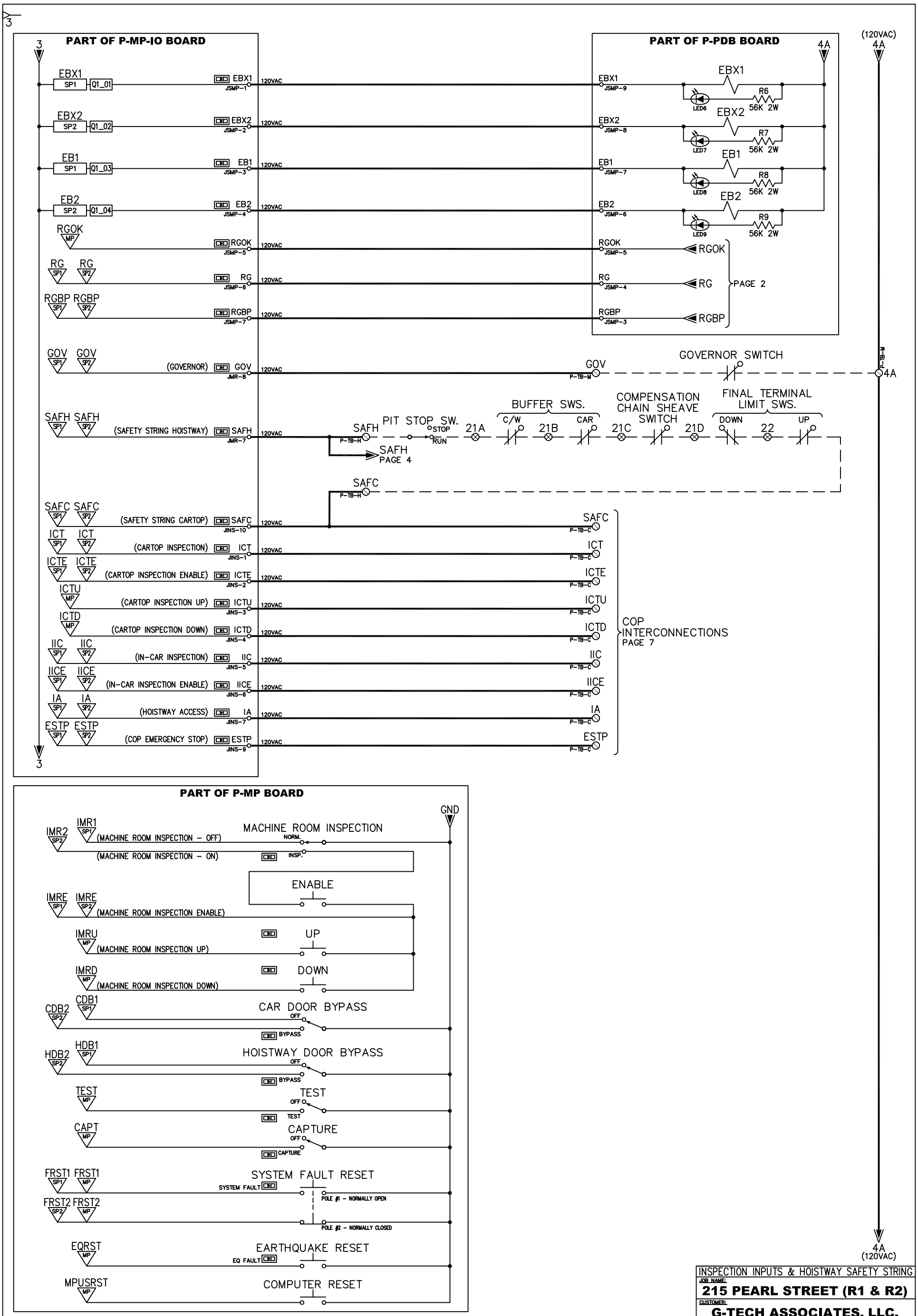

1 TERMINAL IS NOT PROVIDED IN CONTROLLER. REFERENCE POINT ONLY.

NOTE: REFER TO PAGE 9 FOR INSPECTION HOISTWAY ACCESS TOP AND BOTTOM DIRECTION SWITCHES

INSPECTION INPUTS & HOISTWAY SAFETY STRING

JOB NAME: **215 PEARL STREET (R1 & R2)**

CUSTOMER: **G-TECH ASSOCIATES, LLC.**

ENGINEERED BY: Jason Kirlis | DATE: 07/14/17 | REVISION DATE:

ELEVATOR CONTROLS
6150 WAREHOUSE WAY
SACRAMENTO, CA 95826 USA
PHONE: (800)829-8106 FAX: (916)428-1728
www.elevatorcontrols.com

CONTROLLER MODEL: PIXEL AC VECTOR-GL-L2

JOB NUMBER: 17-19017

M_PIXEL-3.dwg | 09/14/16
FILE: J19017_3.dwg

CONTROLLER ID: A & B | PAGE NUMBER: 3

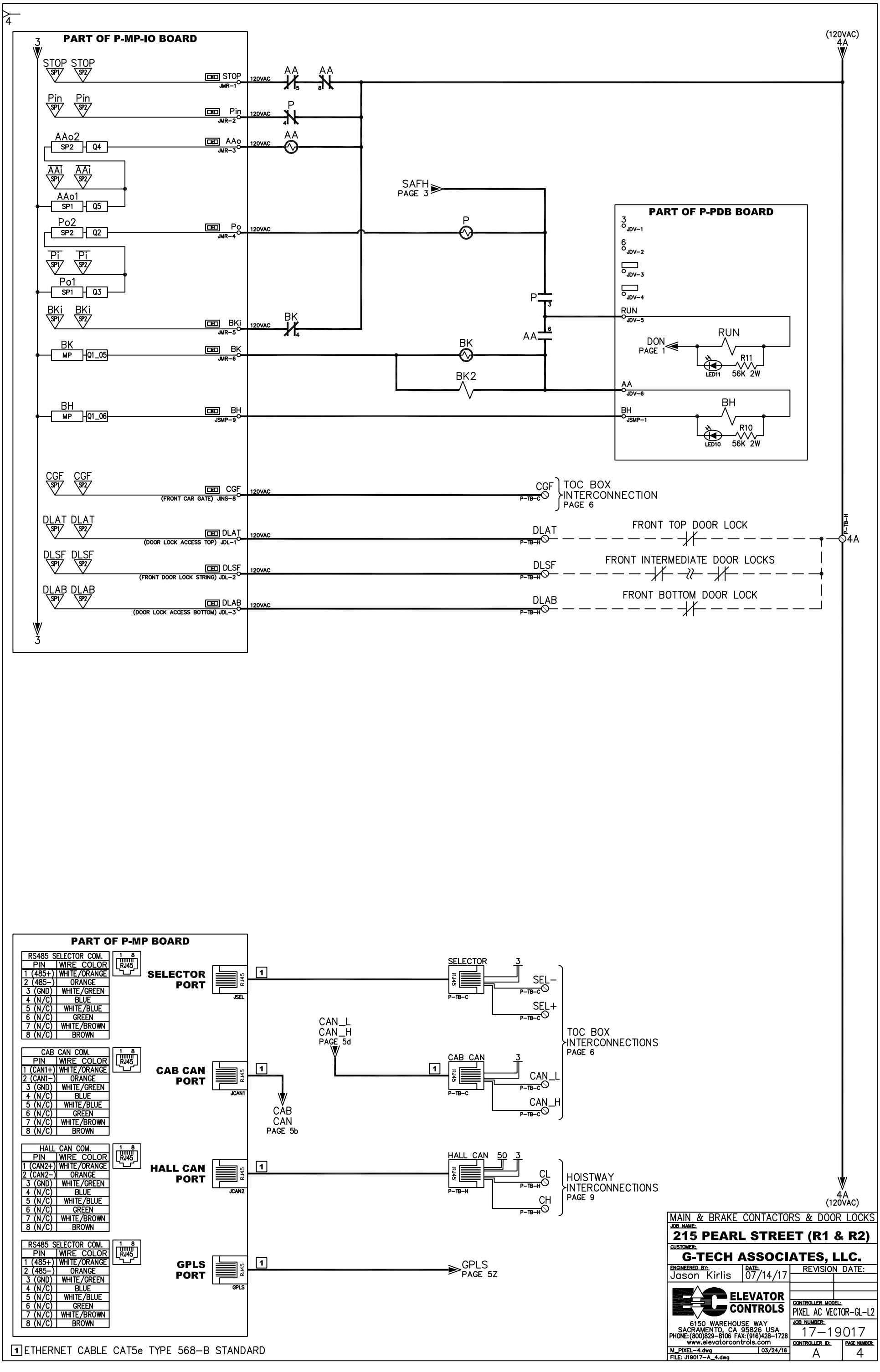

1 ETHERNET CABLE CAT5e TYPE 568-B STANDARD

MAIN & BRAKE CONTACTORS & DOOR LOCKS

JOB NAME: **215 PEARL STREET (R1 & R2)**

CUSTOMER: **G-TECH ASSOCIATES, LLC.**

ENGINEERED BY: Jason Kirlis | DATE: 07/14/17 | REVISION DATE:

ELEVATOR CONTROLS
6150 WAREHOUSE WAY
SACRAMENTO, CA 95826 USA
PHONE:(800)829-8106 FAX:(916)428-1728
www.elevatorcontrols.com

CONTROLLER MODEL: PIXEL AC VECTOR-GL-L2

JOB NUMBER: 17-19017

CONTROLLER ID: A | PAGE NUMBER: 4

M_PIXEL-4.dwg 03/24/16
FILE: J19017-A_4.dwg

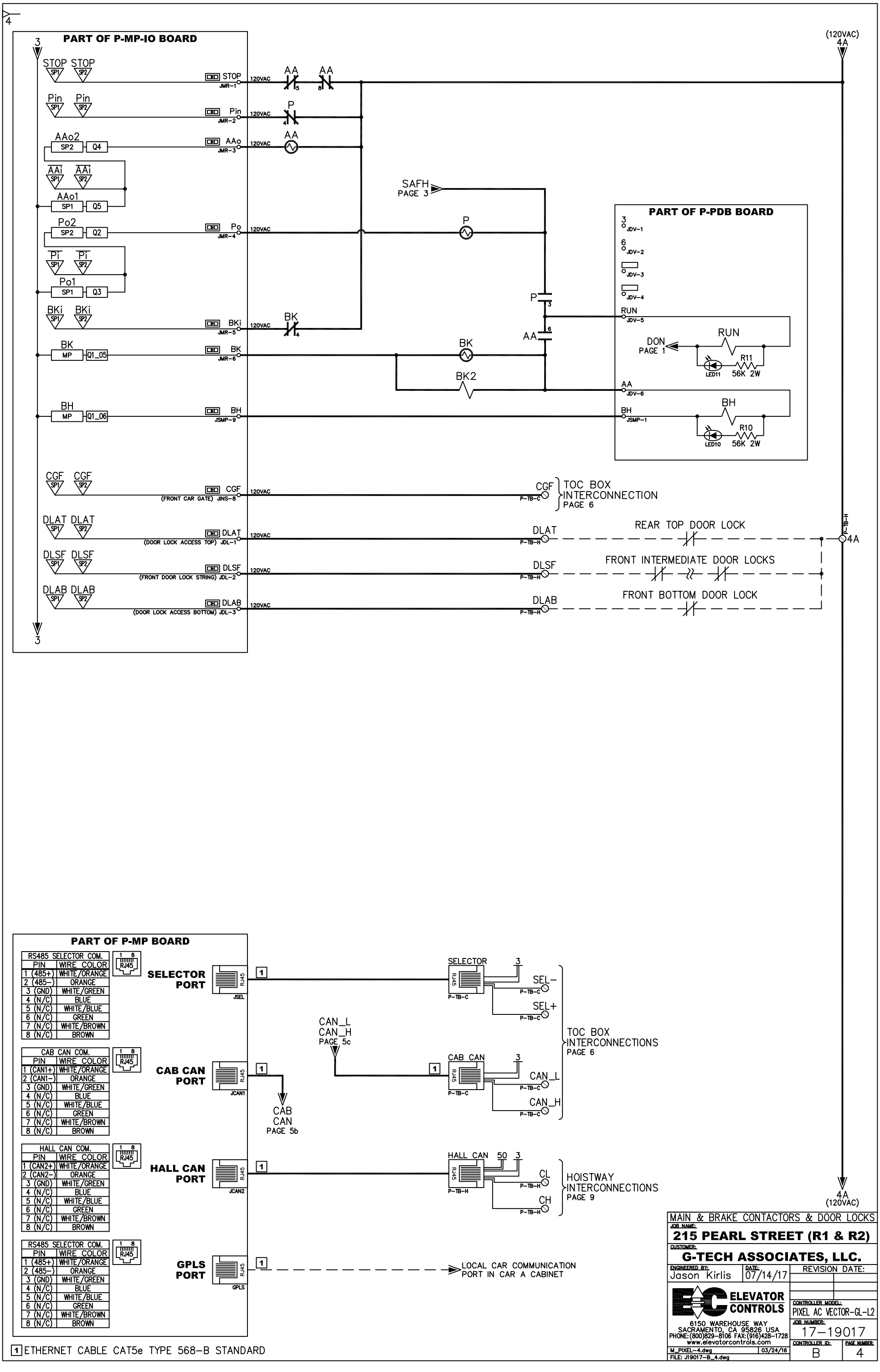

RS485 SELECTOR COM.	
PIN	WIRE COLOR
1 (485+)	WHITE/ORANGE
2 (485−)	ORANGE
3 (GND)	WHITE/GREEN
4 (N/C)	BLUE
5 (N/C)	WHITE/BLUE
6 (N/C)	GREEN
7 (N/C)	WHITE/BROWN
8 (N/C)	BROWN

CAB CAN COM.	
PIN	WIRE COLOR
1 (CAN1+)	WHITE/ORANGE
2 (CAN1−)	ORANGE
3 (GND)	WHITE/GREEN
4 (N/C)	BLUE
5 (N/C)	WHITE/BLUE
6 (N/C)	GREEN
7 (N/C)	WHITE/BROWN
8 (N/C)	BROWN

HALL CAN COM.	
PIN	WIRE COLOR
1 (CAN2+)	WHITE/ORANGE
2 (CAN2−)	ORANGE
3 (GND)	WHITE/GREEN
4 (N/C)	BLUE
5 (N/C)	WHITE/BLUE
6 (N/C)	GREEN
7 (N/C)	WHITE/BROWN
8 (N/C)	BROWN

RS485 SELECTOR COM.	
PIN	WIRE COLOR
1 (485+)	WHITE/ORANGE
2 (485−)	ORANGE
3 (GND)	WHITE/GREEN
4 (N/C)	BLUE
5 (N/C)	WHITE/BLUE
6 (N/C)	GREEN
7 (N/C)	WHITE/BROWN
8 (N/C)	BROWN

1 ETHERNET CABLE CAT5e TYPE 568−B STANDARD

MAIN & BRAKE CONTACTORS & DOOR LOCKS

JOB NAME: **215 PEARL STREET (R1 & R2)**

CUSTOMER: **G-TECH ASSOCIATES, LLC.**

ENGINEERED BY: Jason Kirlis | DATE: 07/14/17 | REVISION DATE:

ELEVATOR CONTROLS
6150 WAREHOUSE WAY
SACRAMENTO, CA 95826 USA
PHONE:(800)829−8106 FAX:(916)428−1728
www.elevatorcontrols.com

CONTROLLER MODEL: PIXEL AC VECTOR-GL-L2

JOB NUMBER: 17−19017

M_PIXEL−4.dwg 03/24/16
FILE: J19017−B_4.dwg

CONTROLLER ID: B | PAGE NUMBER: 4

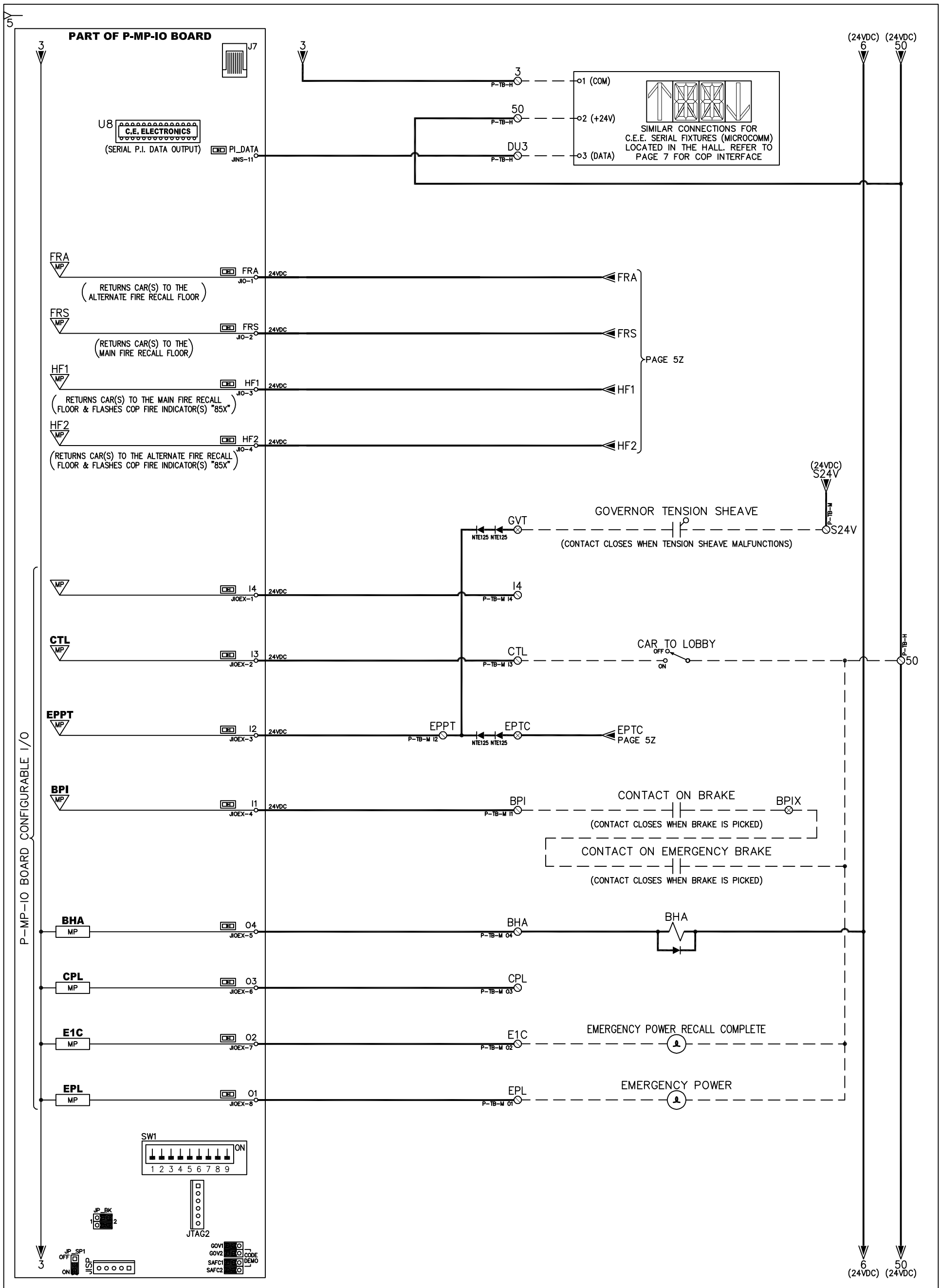

P-MP-IO BOARD – INPUTS/OUTPUTS

JOB NAME: **215 PEARL STREET (R1 & R2)**

CUSTOMER: **G-TECH ASSOCIATES, LLC.**

ENGINEERED BY: Jason Kirlis | DATE: 07/14/17 | REVISION DATE: 03/13/2017 JPK

ELEVATOR CONTROLS
6150 WAREHOUSE WAY
SACRAMENTO, CA 95826 USA
PHONE: (800)829-8106 FAX: (916)428-1728
www.elevatorcontrols.com

CONTROLLER MODEL: PIXEL AC VECTOR-GL-L2

JOB NUMBER: 17-19017

CONTROLLER ID: A | PAGE NUMBER: 5

M_PIXEL-5.dwg 03/24/16
FILE: J19017-A_5.dwg

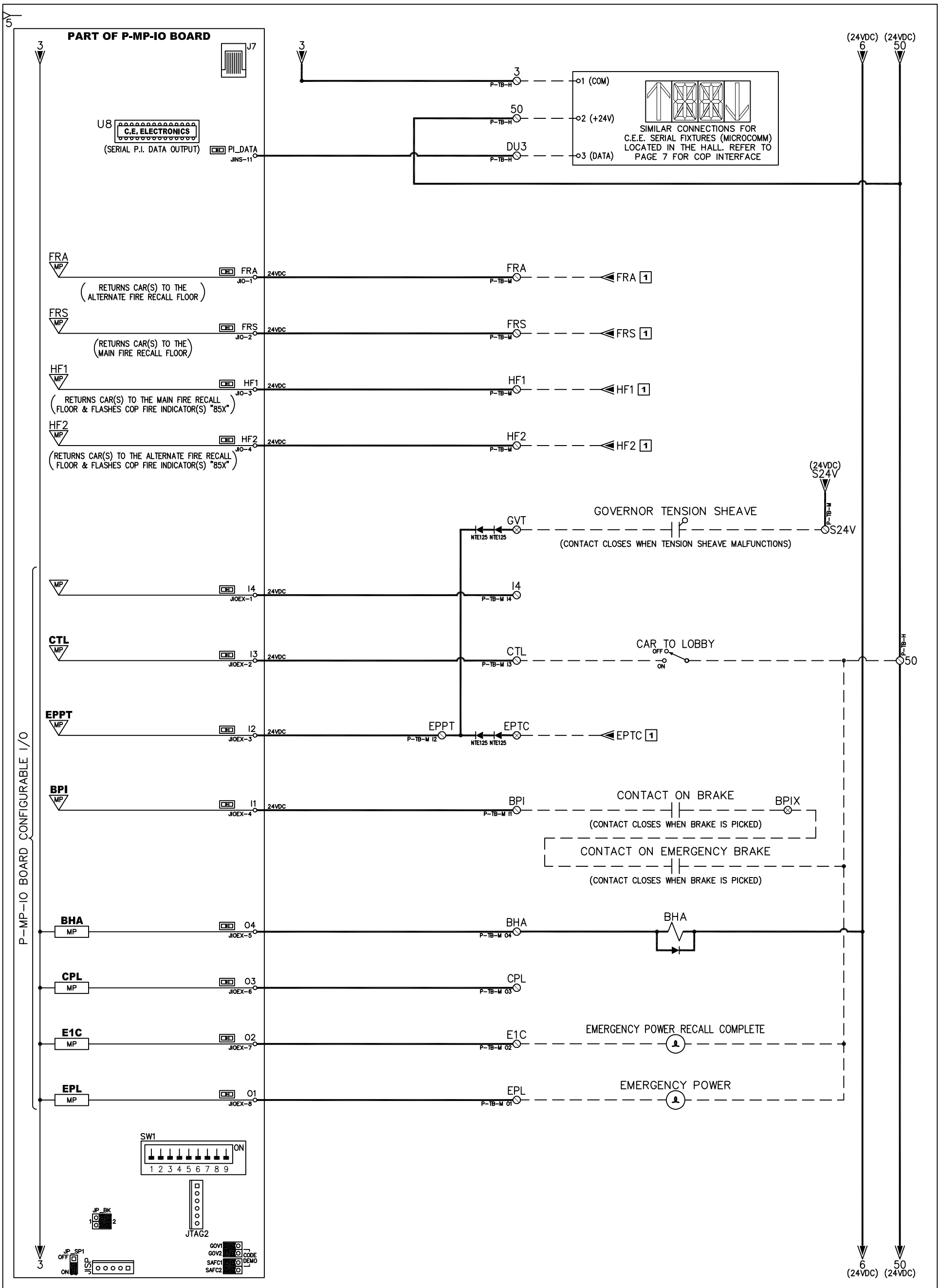

1 TERMINAL LOCATED IN CAR A CABINET

P-MP-IO BOARD – INPUTS/OUTPUTS

JOB NAME: **215 PEARL STREET (R1 & R2)**

CUSTOMER: **G-TECH ASSOCIATES, LLC.**

ENGINEERED BY: Jason Kirlis | DATE: 07/14/17 | REVISION DATE: 03/13/2017 JPK

ELEVATOR CONTROLS
6150 WAREHOUSE WAY
SACRAMENTO, CA 95826 USA
PHONE: (800)829-8106 FAX: (916)428-1728
www.elevatorcontrols.com

CONTROLLER MODEL: PIXEL AC VECTOR-GL-L2

JOB NUMBER: 17-19017

CONTROLLER ID: B | PAGE NUMBER: 5

M_PIXEL-5.dwg 03/24/16
FILE: J19017-B_5.dwg

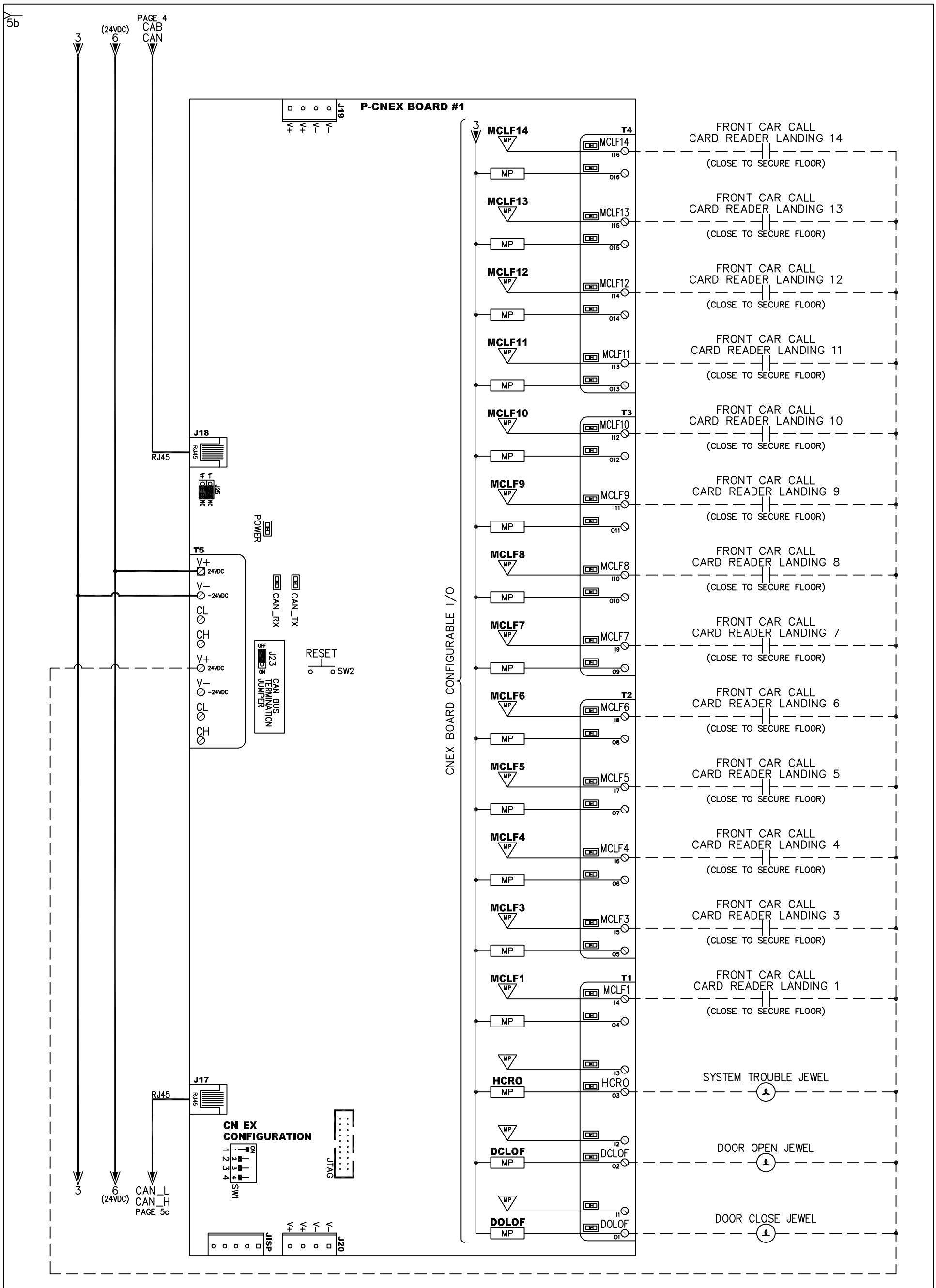

MP P-CNEX BOARD - EXPANSION I/O

JOB NAME: **215 PEARL STREET (R1 & R2)**

CUSTOMER: **G-TECH ASSOCIATES, LLC.**

ENGINEERED BY: Jason Kirlis | DATE: 07/14/17 | REVISION DATE:

ELEVATOR CONTROLS
6150 WAREHOUSE WAY
SACRAMENTO, CA 95826 USA
PHONE: (800)829-8106 FAX: (916)428-1728
www.elevatorcontrols.com

CONTROLLER MODEL: PIXEL AC VECTOR-GL-L2

JOB NUMBER: 17-19017

M_PIXEL-5b.dwg 08/23/16

FILE: J19017-A_5b.dwg

CONTROLLER ID: A | PAGE NUMBER: 5b

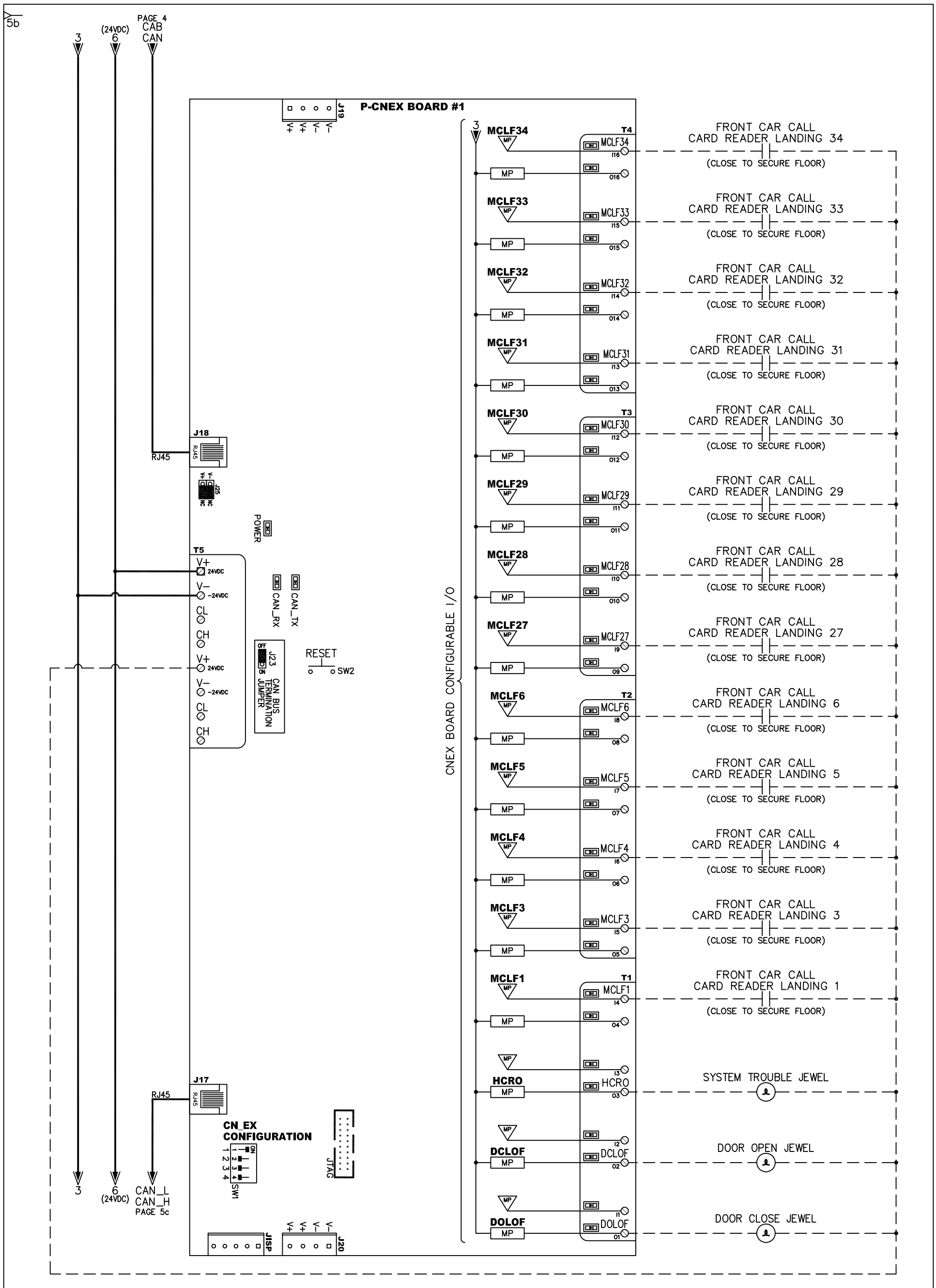

MP P-CNEX BOARD - EXPANSION I/O

JOB NAME: **215 PEARL STREET (R1 & R2)**

CUSTOMER: **G-TECH ASSOCIATES, LLC.**

ENGINEERED BY: Jason Kirlis | DATE: 07/14/17 | REVISION DATE:

ELEVATOR CONTROLS
6150 WAREHOUSE WAY
SACRAMENTO, CA 95826 USA
PHONE: (800)829-8106 FAX: (916)428-1728
www.elevatorcontrols.com

CONTROLLER MODEL: PIXEL AC VECTOR-GL-L2

JOB NUMBER: 17-19017

M_PIXEL-5b.dwg 08/23/16

FILE: J19017-B_5b.dwg

CONTROLLER ID: A | PAGE NUMBER: 5b

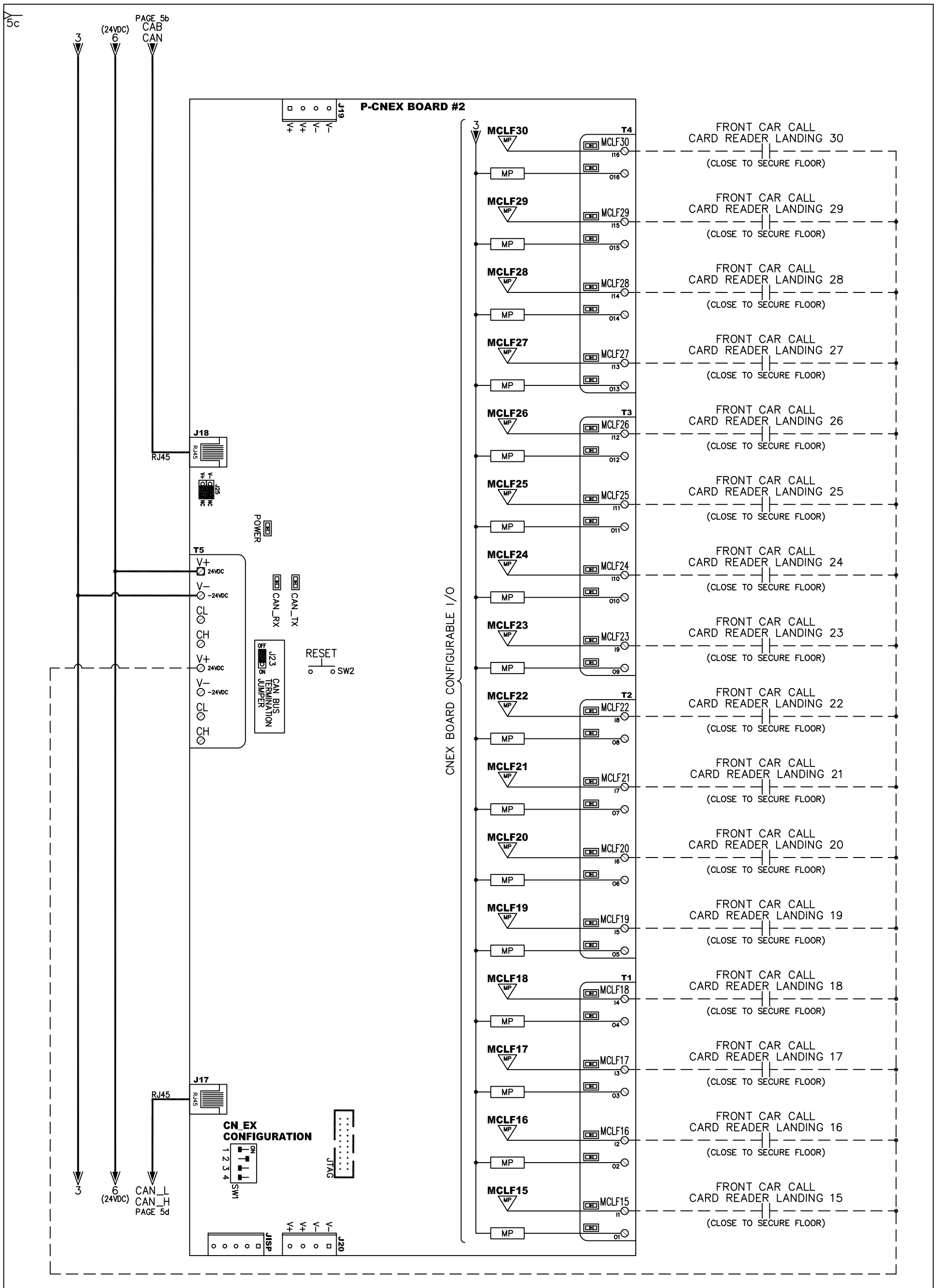

MP P-CNEX BOARD - EXPANSION I/O

JOB NAME: **215 PEARL STREET (R1 & R2)**

CUSTOMER: **G-TECH ASSOCIATES, LLC.**

ENGINEERED BY: Jason Kirlis | DATE: 07/14/17 | REVISION DATE:

ELEVATOR CONTROLS
6150 WAREHOUSE WAY
SACRAMENTO, CA 95826 USA
PHONE: (800)829-8106 FAX: (916)428-1728
www.elevatorcontrols.com

CONTROLLER MODEL: PIXEL AC VECTOR-GL-L2

JOB NUMBER: 17-19017

M_PIXEL-5b.dwg 08/23/16

FILE: J19017-A_5c.dwg

CONTROLLER ID: A | PAGE NUMBER: 5c

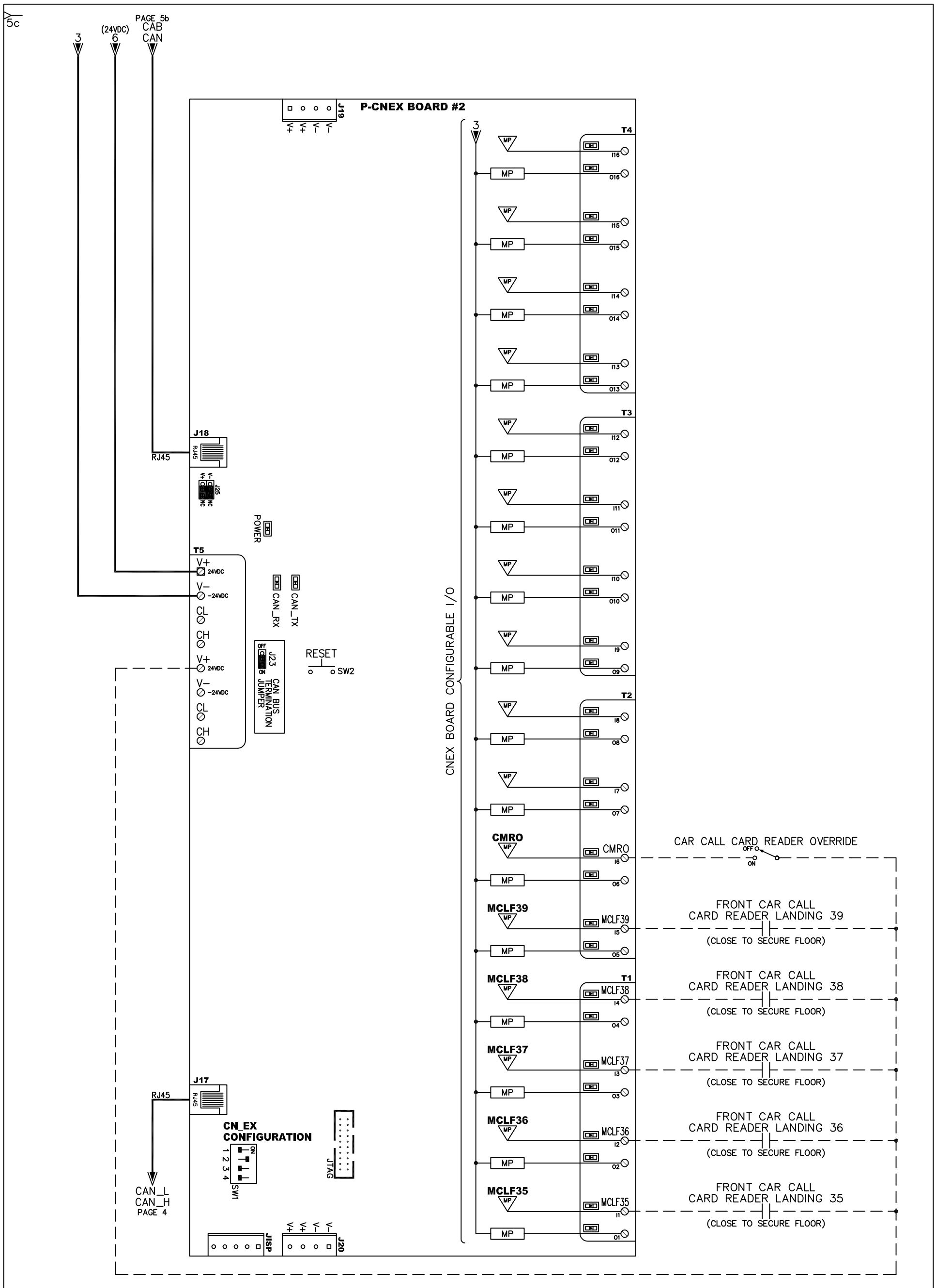

MP P-CNEX BOARD – EXPANSION I/O

JOB NAME: **215 PEARL STREET (R1 & R2)**

CUSTOMER: **G-TECH ASSOCIATES, LLC.**

ENGINEERED BY: Jason Kirlis | DATE: 07/14/17 | REVISION DATE:

ELEVATOR CONTROLS
6150 WAREHOUSE WAY
SACRAMENTO, CA 95826 USA
PHONE: (800)829-8106 FAX: (916)428-1728
www.elevatorcontrols.com

CONTROLLER MODEL: PIXEL AC VECTOR-GL-L2

JOB NUMBER: 17-19017

M_PIXEL-5b.dwg 08/23/16

FILE: J19017-B_5c.dwg

CONTROLLER ID: B | PAGE NUMBER: 5c

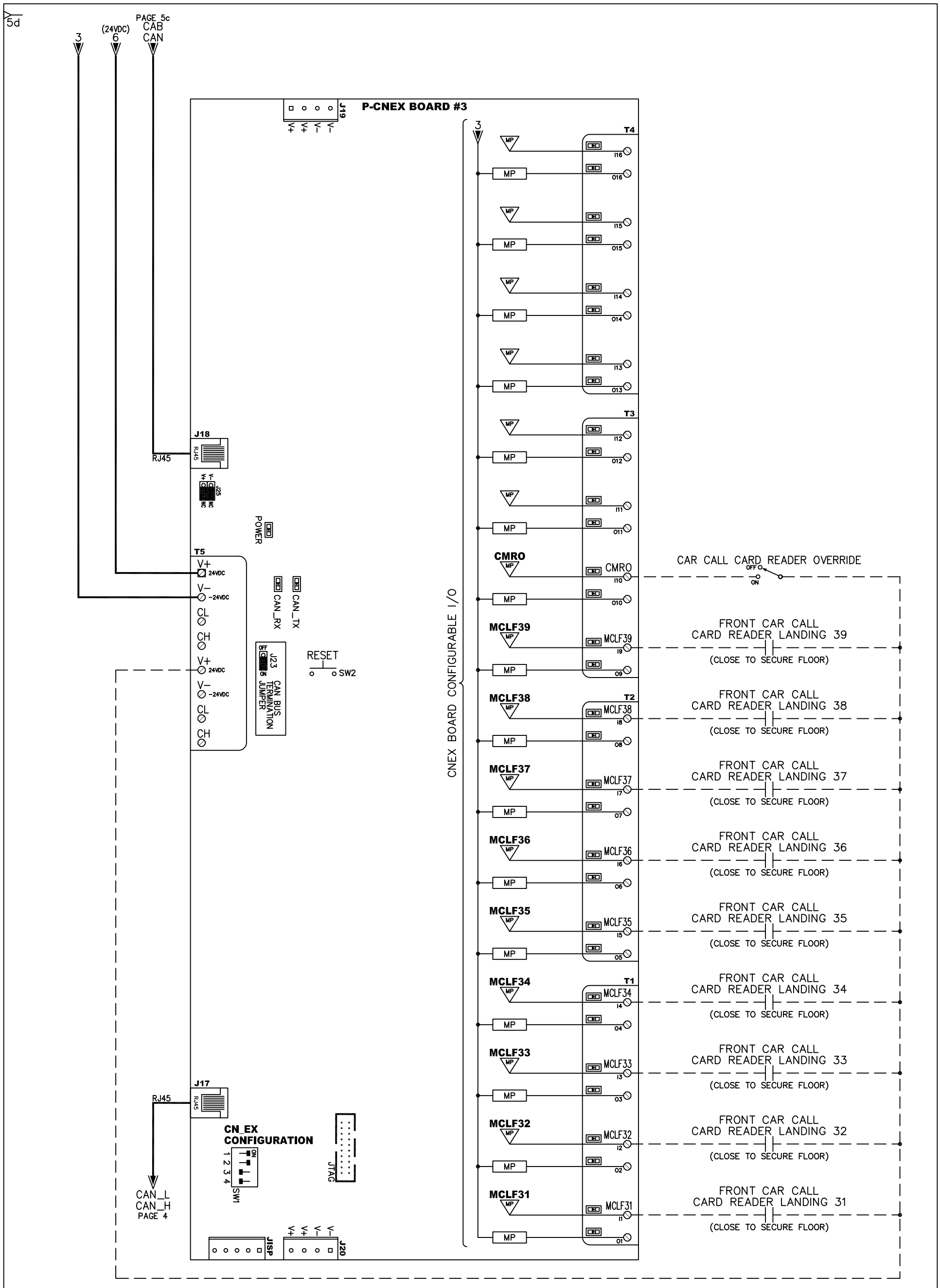

MP P-CNEX BOARD - EXPANSION I/O

JOB NAME: **215 PEARL STREET (R1 & R2)**

CUSTOMER: **G-TECH ASSOCIATES, LLC.**

ENGINEERED BY: Jason Kirlis | DATE: 07/14/17 | REVISION DATE:

ELEVATOR CONTROLS
6150 WAREHOUSE WAY
SACRAMENTO, CA 95826 USA
PHONE: (800)829-8106 FAX: (916)428-1728
www.elevatorcontrols.com

CONTROLLER MODEL: PIXEL AC VECTOR-GL-L2

JOB NUMBER: 17-19017

M_PIXEL-5b.dwg 08/23/16

FILE: J19017-A_5d.dwg

CONTROLLER ID: A | PAGE NUMBER: 5d

5Z

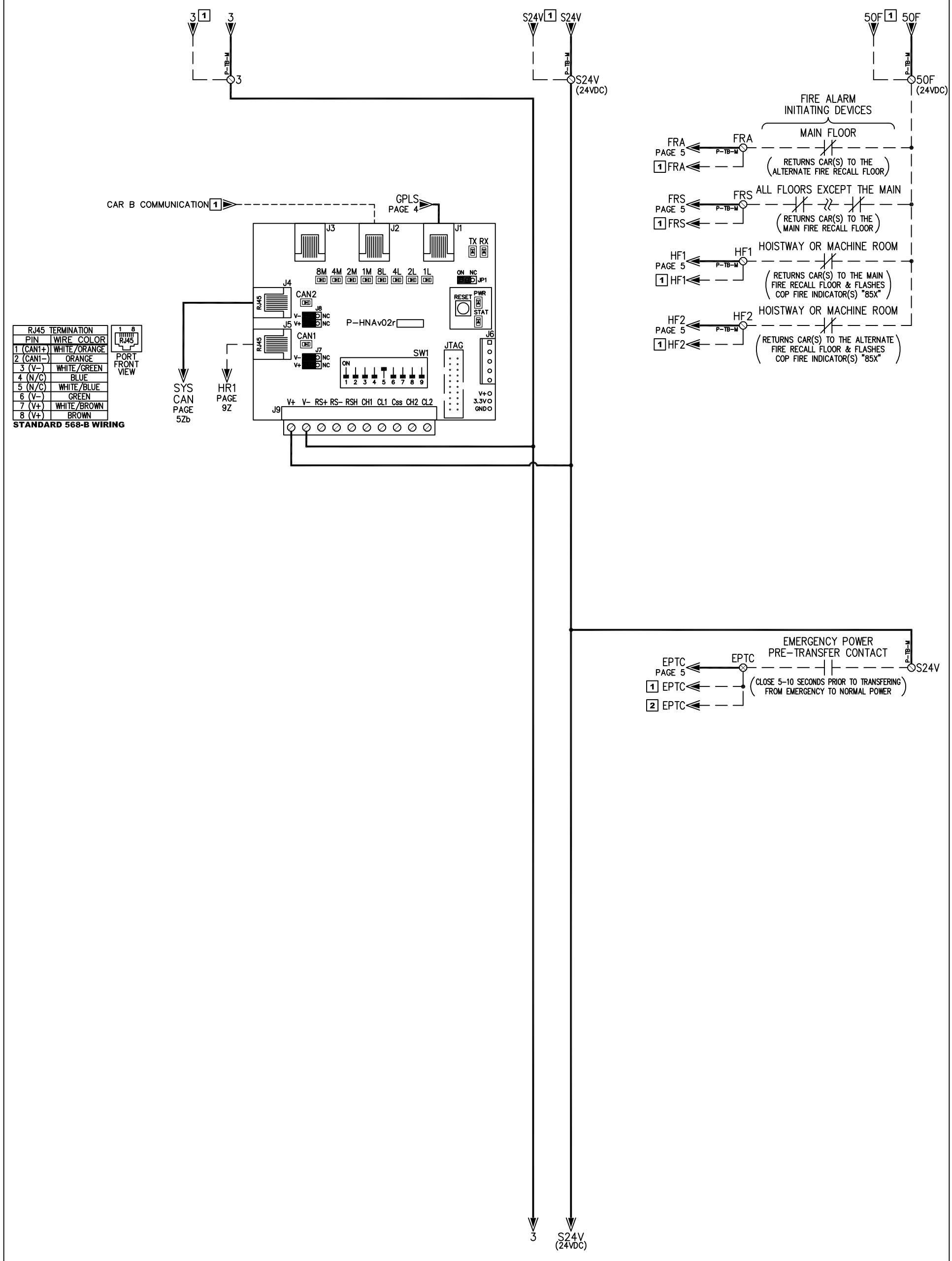

1 TERMINAL LOCATED IN CAR B CABINET

P-HNA BOARD, GROUPLESS INTERCONNECTIONS

JOB NAME: **215 PEARL STREET (R1 & R2)**

CUSTOMER: **G-TECH ASSOCIATES, LLC.**

ENGINEERED BY: Jason Kirlis | DATE: 07/14/17 | REVISION DATE: 03/24/2017 JPK

ELEVATOR CONTROLS
6150 WAREHOUSE WAY
SACRAMENTO, CA 95826 USA
PHONE:(800)829-8106 FAX:(916)428-1728
www.elevatorcontrols.com

CONTROLLER MODEL: PIXEL AC VECTOR-GL-L2

JOB NUMBER: 17-19017

CONTROLLER ID: A | PAGE NUMBER: 5Z

M_PIXEL-9.dwg 03/24/16
FILE: J19017-A_5Z.dwg

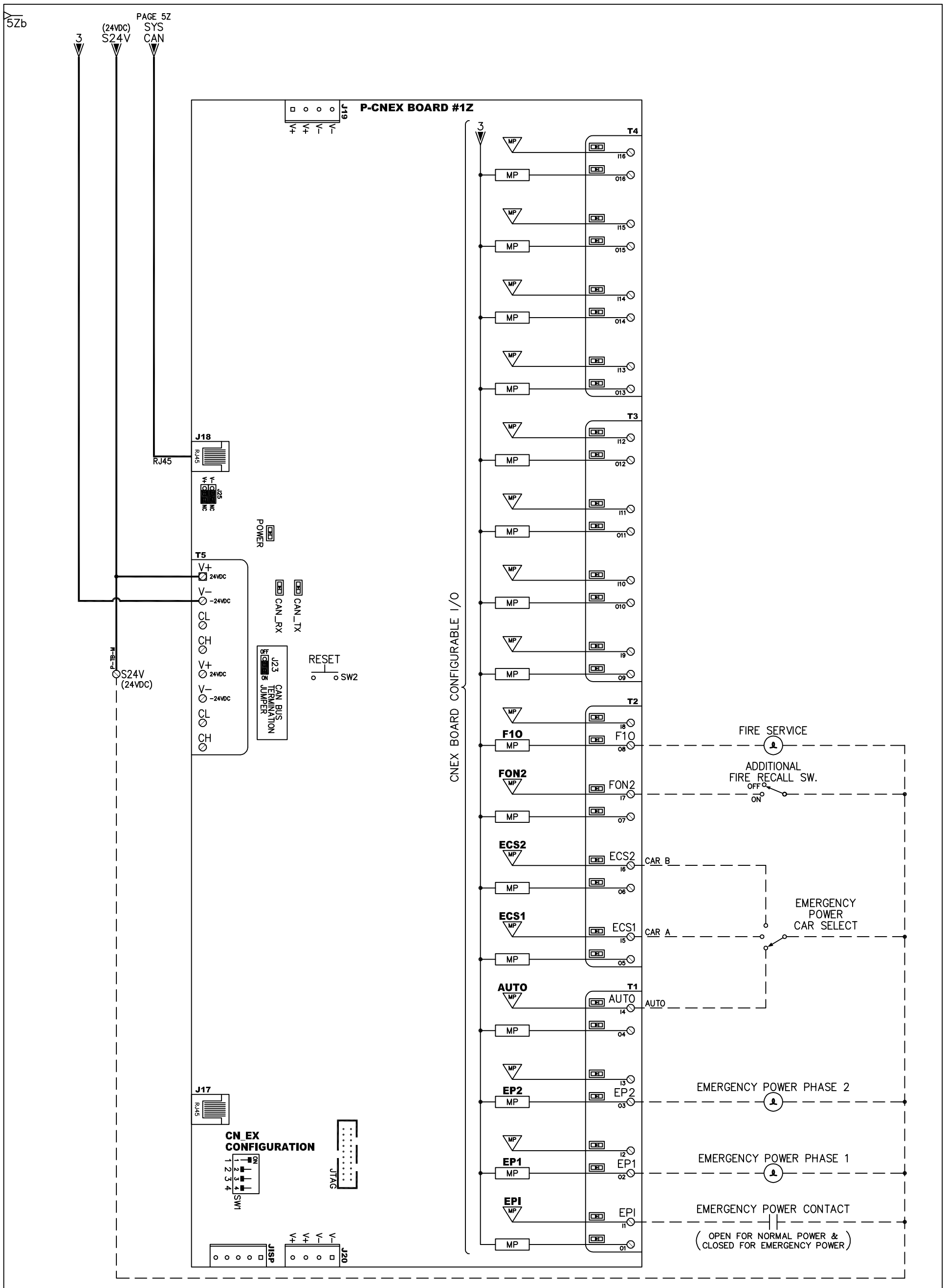

SYSTEM P-CNEX BOARD - EXPANSION I/O

JOB NAME: **215 PEARL STREET (R1 & R2)**

CUSTOMER: **G-TECH ASSOCIATES, LLC.**

ENGINEERED BY: Jason Kirlis | DATE: 07/14/17 | REVISION DATE:

ELEVATOR CONTROLS
6150 WAREHOUSE WAY
SACRAMENTO, CA 95826 USA
PHONE: (800)829-8106 FAX: (916)428-1728
www.elevatorcontrols.com

CONTROLLER MODEL: PIXEL AC VECTOR-GL-L2

JOB NUMBER: 17-19017

M_PIXEL-5b.dwg 08/31/16

FILE: J19017-A_5Zb.dwg

CONTROLLER ID: A | PAGE NUMBER: 5Zb

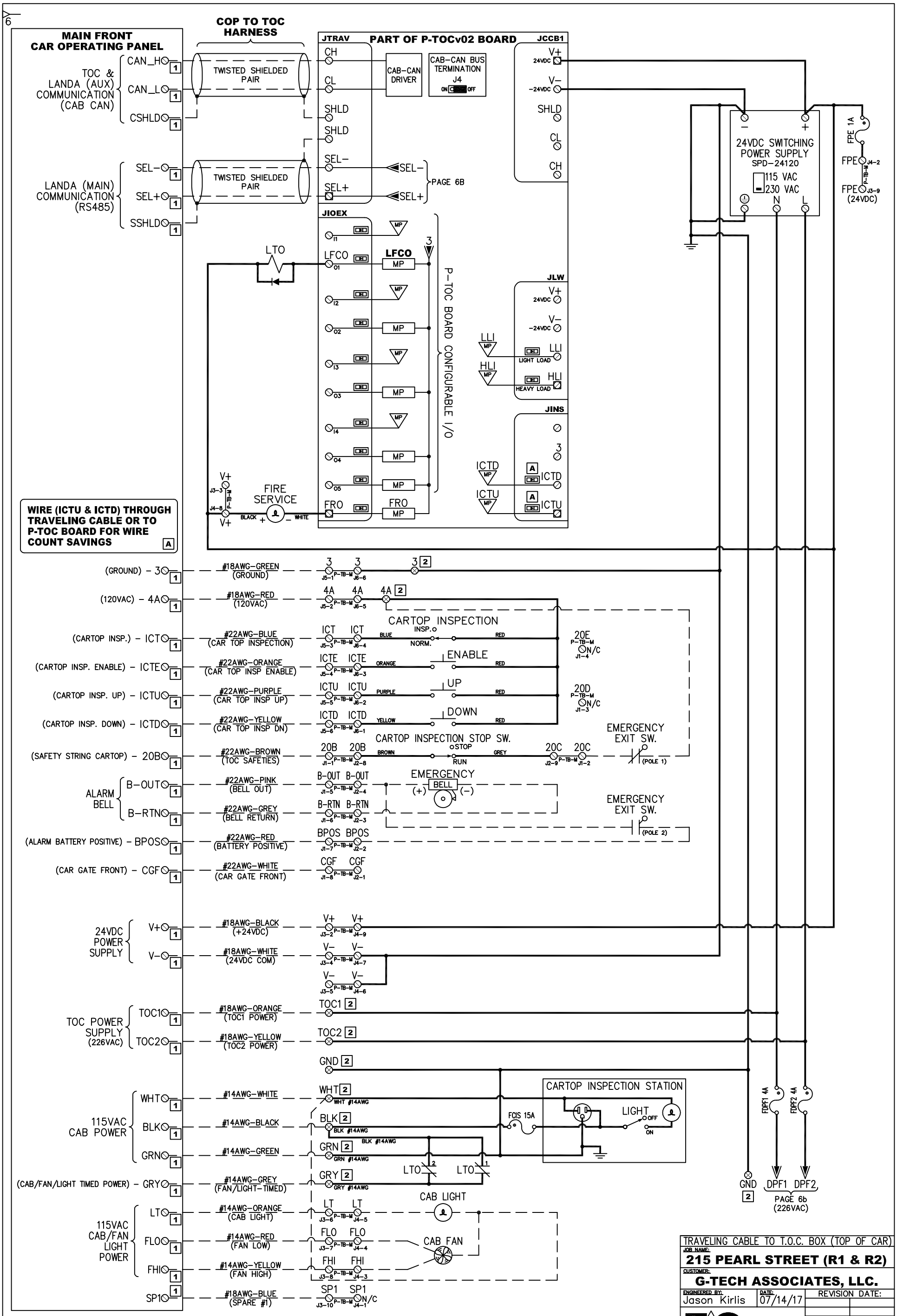

FUSE LIST

FUSE TYPE	FUSES					
250V MDA	FCIS	FDPF1	FDPF2			
250V AGC	ALL OTHERS					

1 TERMINAL LOCATED IN COP (PROVIDED BY COP MANUFACTURER)

2 PANEL MOUNT TERMINAL LOCATED IN THE TOC (CARTOP CABINET)

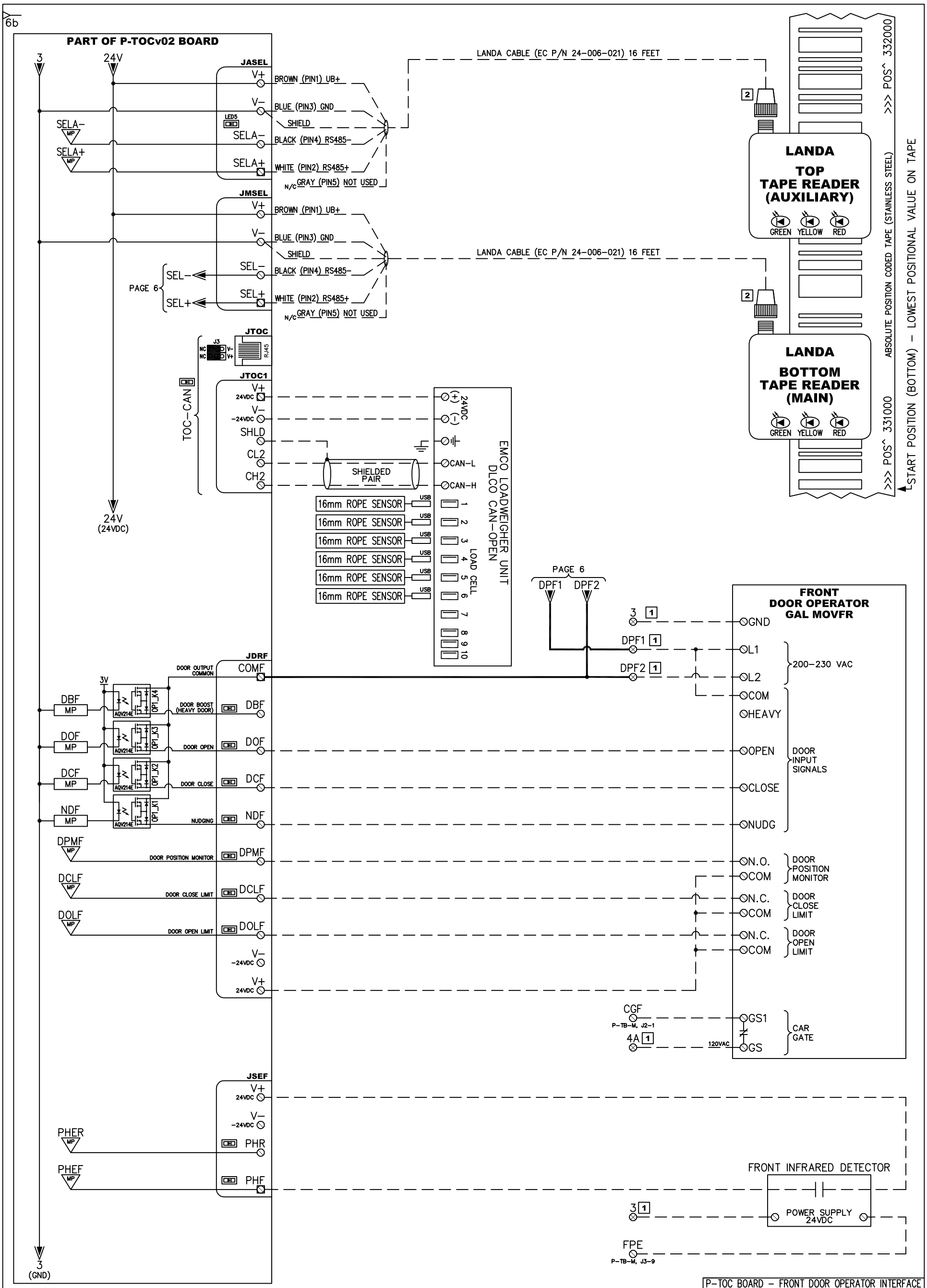

1 PANEL MOUNT TERMINAL LOCATED IN THE TOC (CARTOP CABINET)
2 REFER TO PAGE QR5 FOR LANDA POSITION SYSTEM INSTALLATION INSTRUCTIONS

P-TOC BOARD – FRONT DOOR OPERATOR INTERFACE

JOB NAME: **215 PEARL STREET (R1 & R2)**

CUSTOMER: **G-TECH ASSOCIATES, LLC.**

ENGINEERED BY: Jason Kirlis | DATE: 07/14/17 | REVISION DATE:

ELEVATOR CONTROLS
6150 WAREHOUSE WAY
SACRAMENTO, CA 95826 USA
PHONE:(800)829-8106 FAX:(916)428-1728
www.elevatorcontrols.com

CONTROLLER MODEL: PIXEL AC VECTOR-GL-L2

JOB NUMBER: 17-19017

M_PIXEL-6b.dwg 05/15/17
FILE: J19017_6b.dwg

CONTROLLER ID: A & B | PAGE NUMBER: 6b

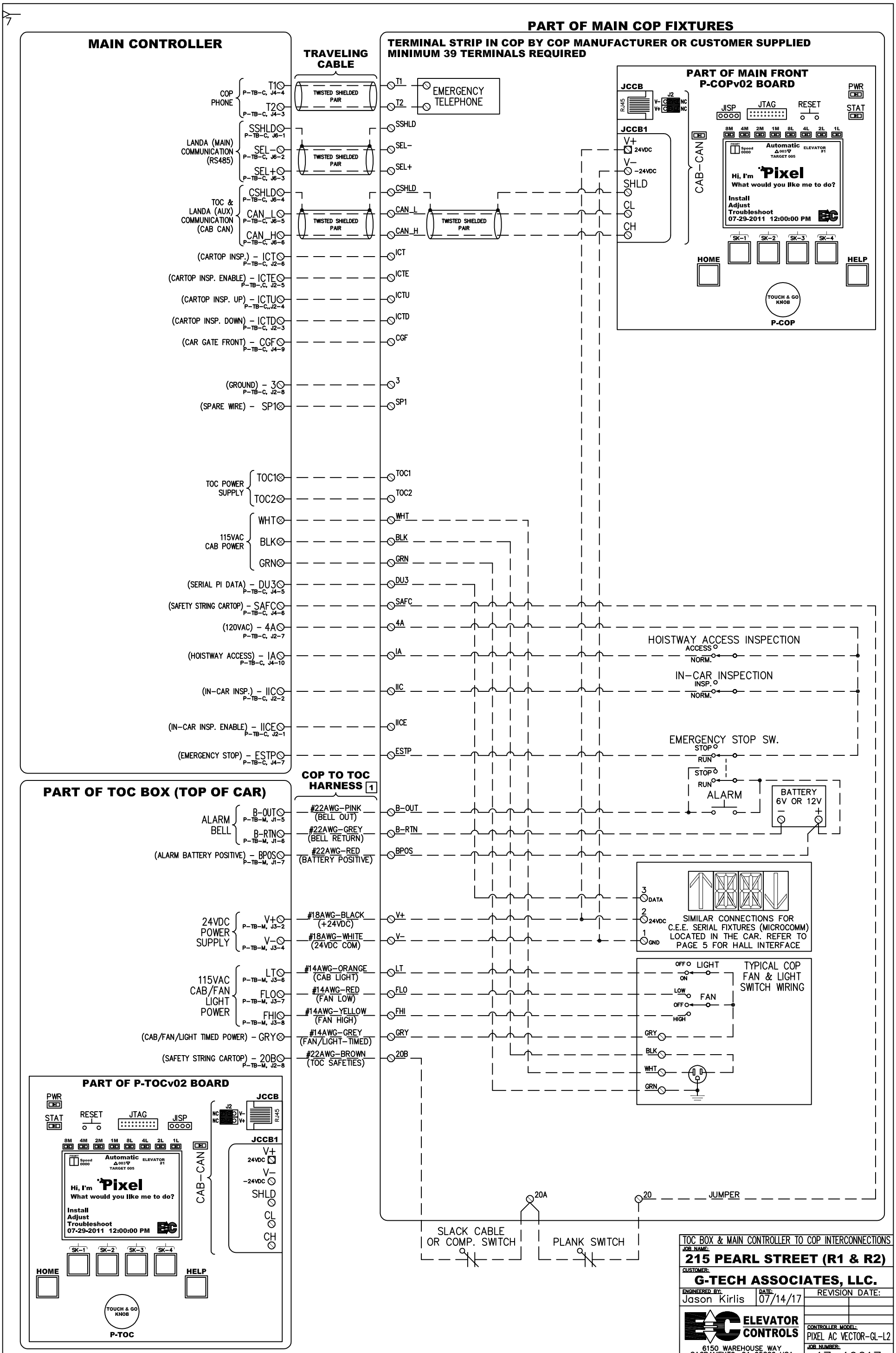

1 THIS PORTION OF THE TOC TO COP HARNESS ALSO APPEARS ON PAGE 6 TO BETTER SHOW DEVICE INTERCONNECTIVITY.

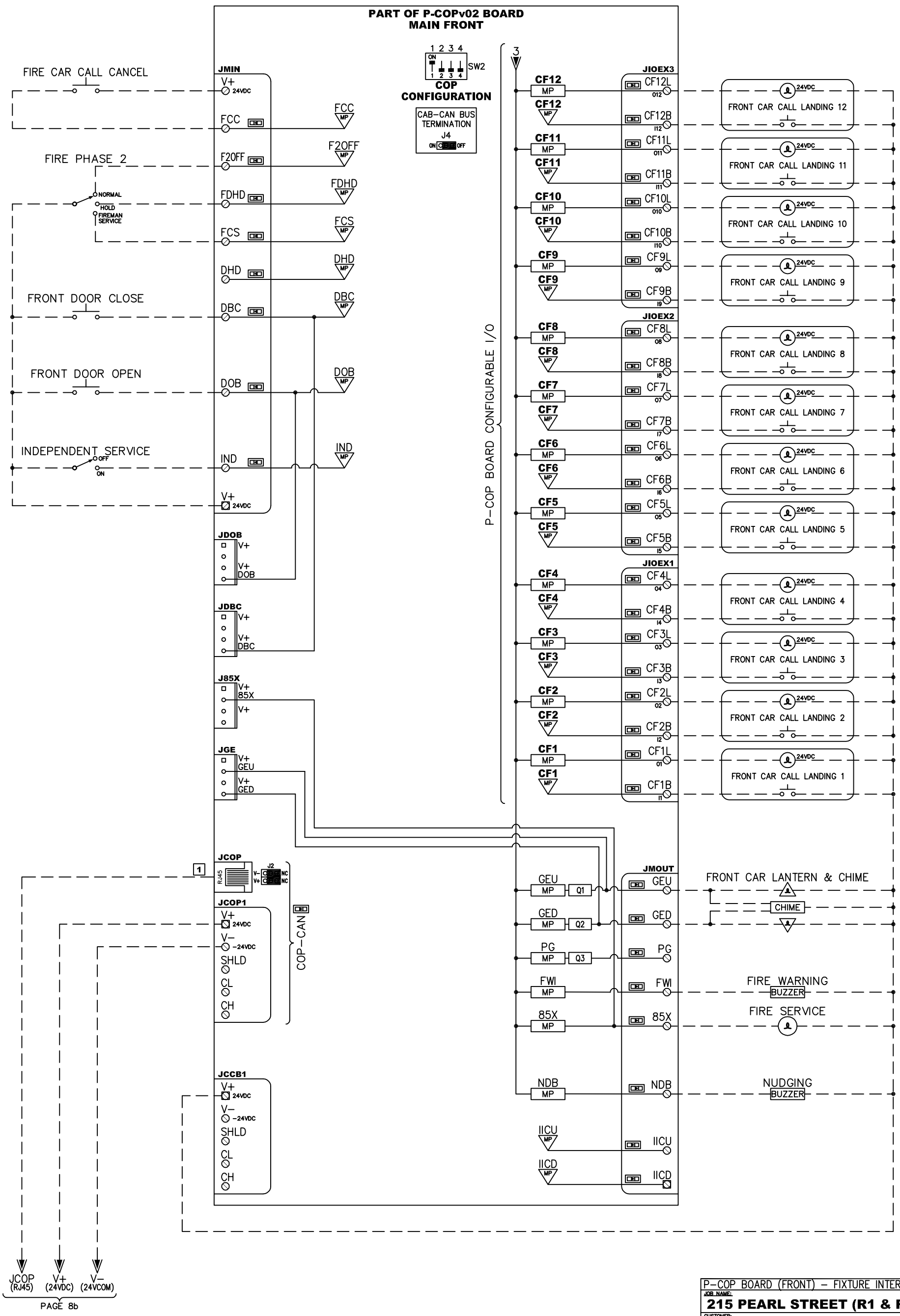

1 ETHERNET CABLE CAT5e TYPE 568-B STANDARD (15 INCHES) EC P/N 19-001-023-15in

P-COP BOARD (FRONT) - FIXTURE INTERFACE

JOB NAME: **215 PEARL STREET (R1 & R2)**

CUSTOMER: **G-TECH ASSOCIATES, LLC.**

ENGINEERED BY: Jason Kirlis | DATE: 07/14/17 | REVISION DATE:

ELEVATOR CONTROLS

6150 WAREHOUSE WAY
SACRAMENTO, CA 95826 USA
PHONE: (800)829-8106 FAX: (916)428-1728
www.elevatorcontrols.com

M_PIXEL-8.dwg | 06/22/17
FILE: J19017-A_8.dwg

CONTROLLER MODEL: PIXEL AC VECTOR-GL-L2

JOB NUMBER: 17-19017

CONTROLLER ID: A | PAGE NUMBER: 8

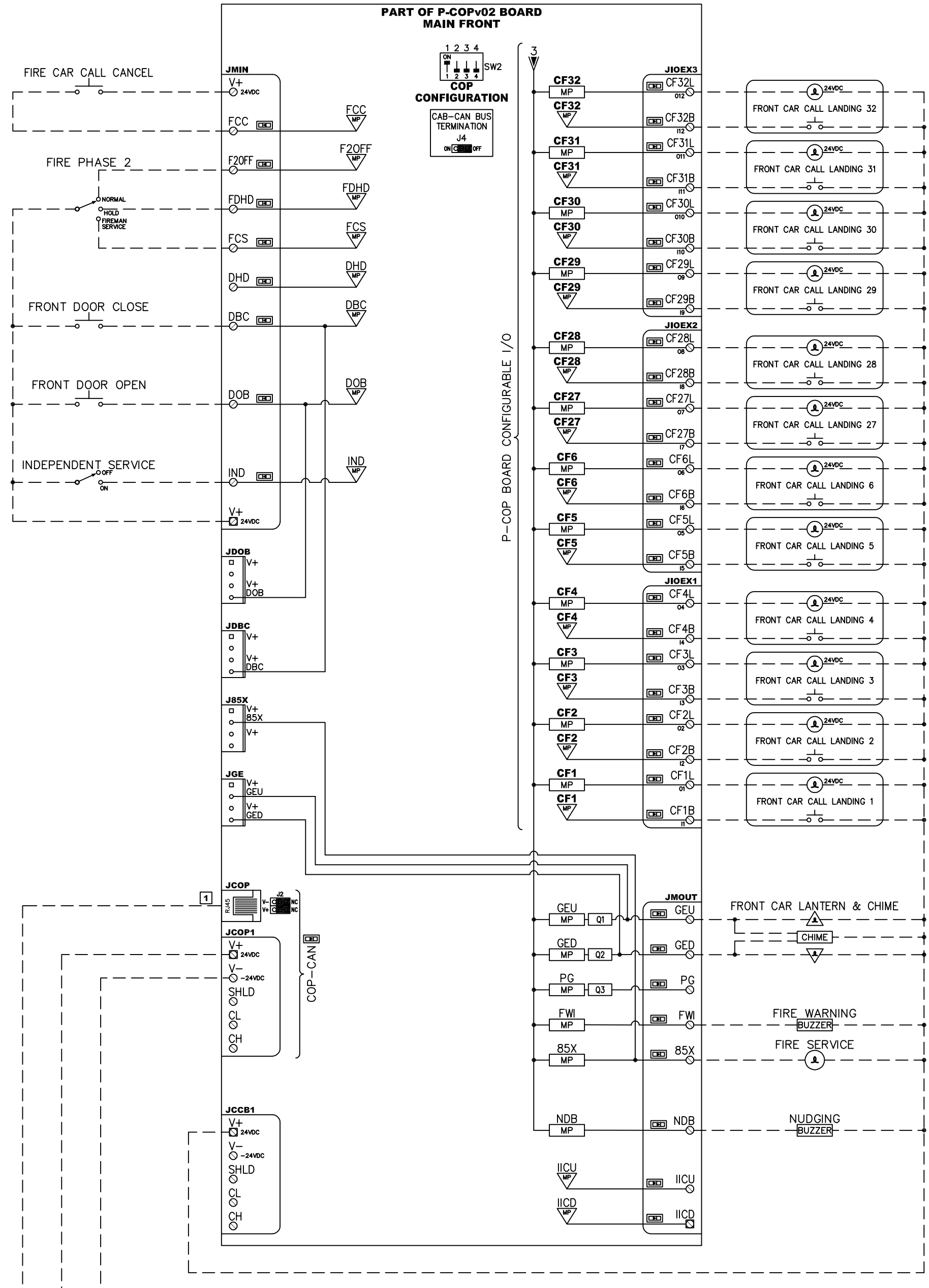

1 ETHERNET CABLE CAT5e TYPE 568-B STANDARD (15 INCHES) EC P/N 19-001-023-15in

P-COP BOARD (FRONT) - FIXTURE INTERFACE

JOB NAME: **215 PEARL STREET (R1 & R2)**

CUSTOMER: **G-TECH ASSOCIATES, LLC.**

ENGINEERED BY: Jason Kirlis | DATE: 07/14/17 | REVISION DATE:

ELEVATOR CONTROLS
6150 WAREHOUSE WAY
SACRAMENTO, CA 95826 USA
PHONE: (800)829-8106 FAX: (916)428-1728
www.elevatorcontrols.com

M_PIXEL-8.dwg | 06/22/17
FILE: J19017-B_8.dwg

CONTROLLER MODEL: PIXEL AC VECTOR-GL-L2

JOB NUMBER: 17-19017

CONTROLLER ID: B | PAGE NUMBER: 8

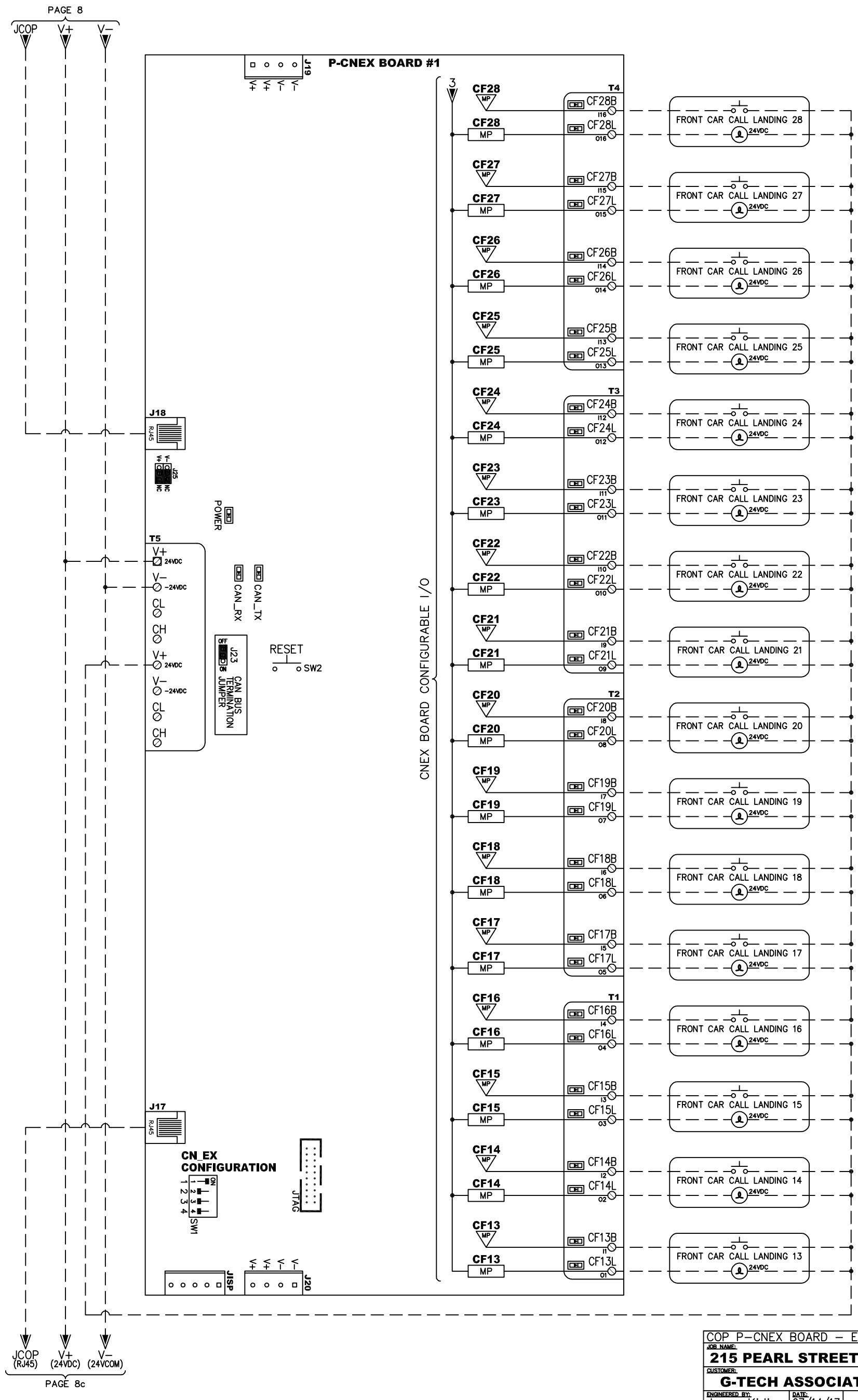

COP P−CNEX BOARD − EXPANSION I/O

JOB NAME: **215 PEARL STREET (R1 & R2)**

CUSTOMER: **G-TECH ASSOCIATES, LLC.**

ENGINEERED BY: Jason Kirlis | DATE: 07/14/17 | REVISION DATE:

ELEVATOR CONTROLS
6150 WAREHOUSE WAY
SACRAMENTO, CA 95826 USA
PHONE: (800)829-8106 FAX: (916)428-1728
www.elevatorcontrols.com

CONTROLLER MODEL: PIXEL AC VECTOR-GL-L2

JOB NUMBER: 17−19017

M_PIXEL−8b.dwg | 08/23/16

FILE: J19017−A_8b.dwg

CONTROLLER ID: A | PAGE NUMBER: 8b

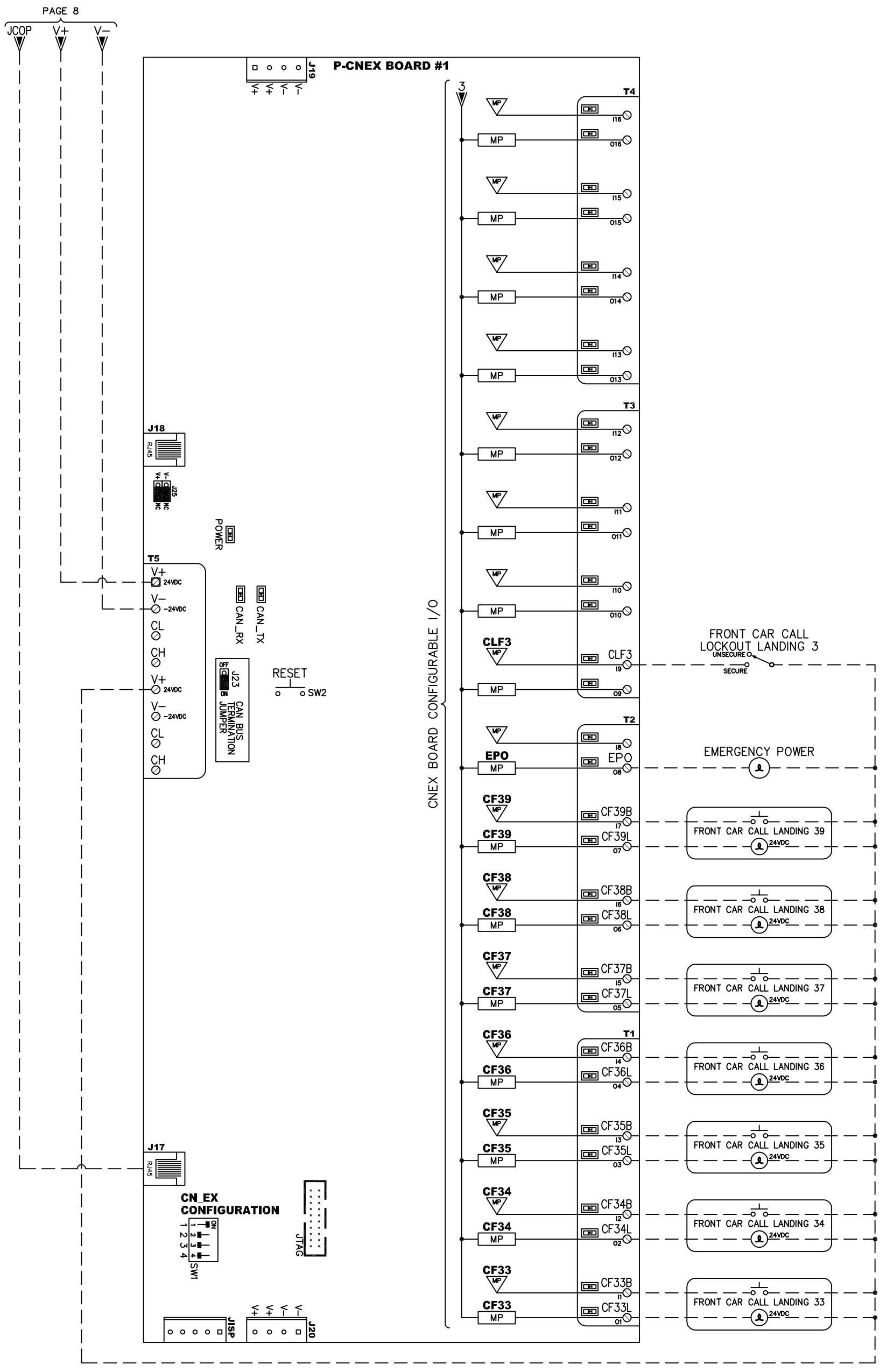

COP P−CNEX BOARD − EXPANSION I/O

JOB NAME: **215 PEARL STREET (R1 & R2)**

CUSTOMER: **G-TECH ASSOCIATES, LLC.**

ENGINEERED BY: Jason Kirlis | DATE: 07/14/17 | REVISION DATE:

ELEVATOR CONTROLS
6150 WAREHOUSE WAY
SACRAMENTO, CA 95826 USA
PHONE: (800)829-8106 FAX: (916)428-1728
www.elevatorcontrols.com

CONTROLLER MODEL: PIXEL AC VECTOR-GL-L2

JOB NUMBER: 17−19017

CONTROLLER ID: B | PAGE NUMBER: 8b

M_PIXEL−8b.dwg | 08/23/16

FILE: J19017−B_8b.dwg

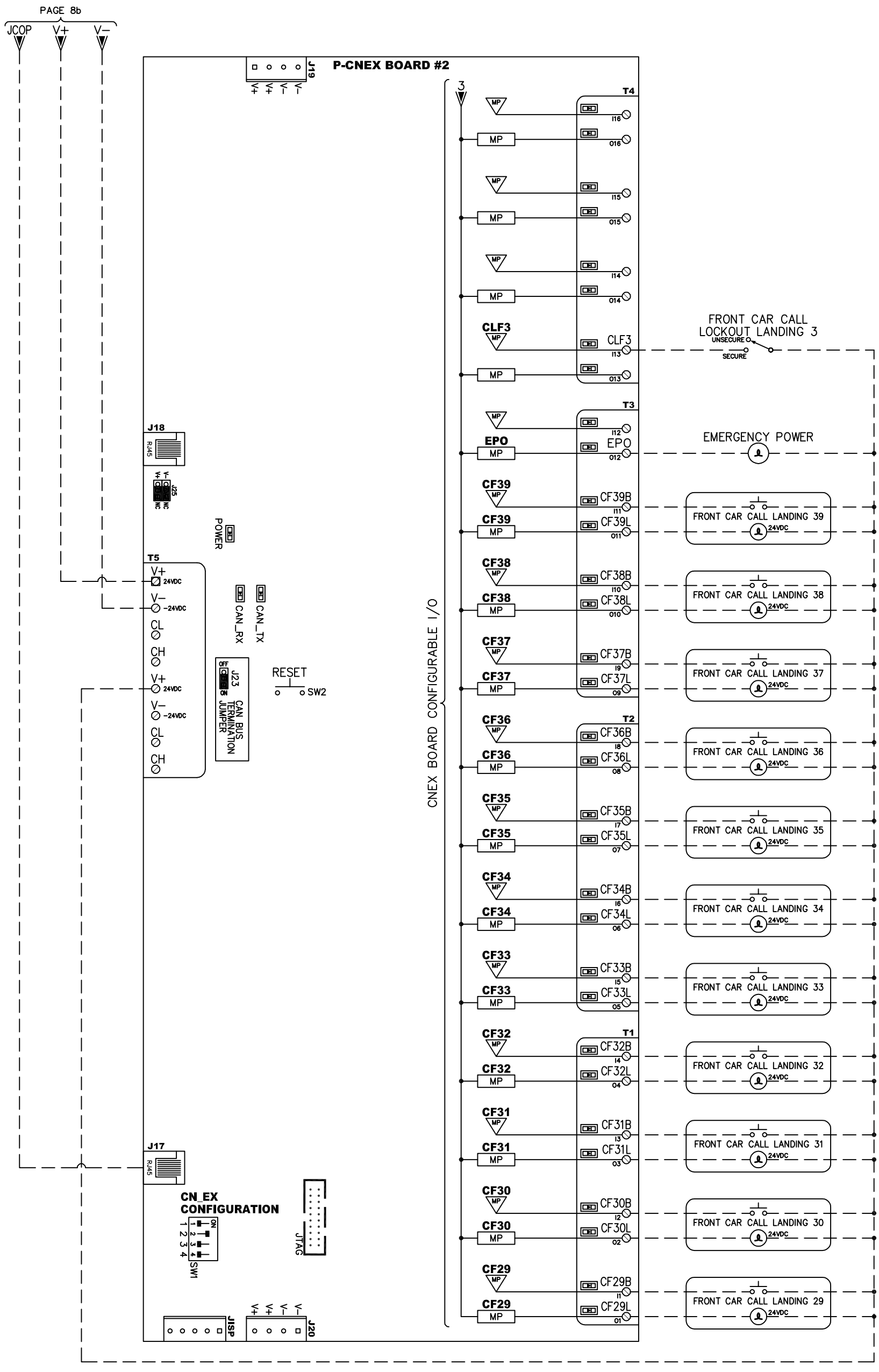

COP P-CNEX BOARD – EXPANSION I/O

JOB NAME: **215 PEARL STREET (R1 & R2)**

CUSTOMER: **G-TECH ASSOCIATES, LLC.**

ENGINEERED BY: Jason Kirlis | DATE: 07/14/17 | REVISION DATE:

ELEVATOR CONTROLS
6150 WAREHOUSE WAY
SACRAMENTO, CA 95826 USA
PHONE: (800)829-8106 FAX: (916)428-1728
www.elevatorcontrols.com

CONTROLLER MODEL: PIXEL AC VECTOR-GL-L2

JOB NUMBER: 17-19017

M_PIXEL-8b.dwg 08/23/16

FILE: J19017-A_8c.dwg

CONTROLLER ID: A | PAGE NUMBER: 8c

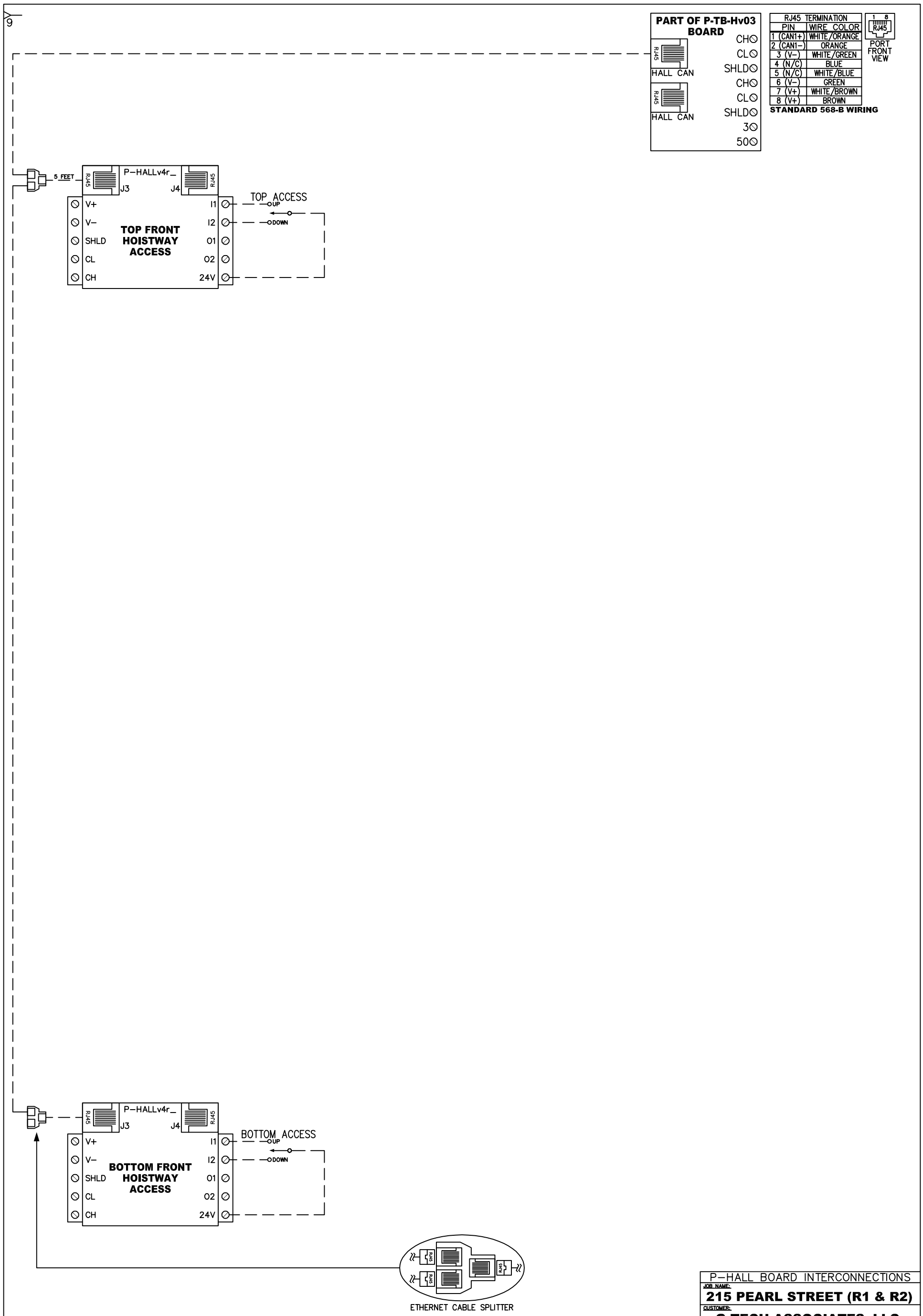

HALL NODE BOARD INSTALLATION INSTRUCTIONS:

ALL SERIAL HALL FIXTURES MUST BE RATED 24VDC/0.5A MAX. PEAK/0.2A MAX. CONTINUOUS.

ALL HALL CAN COMMUNICATION CABLES ARE CAT5e TERMINATED WITH RJ45 CONNECTOR AND WIRED TO 568-B STANDARDS

1. CONNECT THE HALL CALL FIXTURE TO THE P-HALL BOARD I/O AS SHOWN IN THE EXAMPLE ABOVE.
2. CONFIGURE THE P-HALL BOARD DIP SWITCH SETTINGS FOR THE CORRESPONDING HALL CALL FIXTURE (P-HALL BOARD CONFIGURATION REFERENCE TABLE IS LOCATED ON PAGE QR4b).
3. USE HALL CAN CABLES AND SPLITTERS TO INTERCONNECT THE P-HALL BOARDS AS SHOWN IN THE EXAMPLE ABOVE, THESE CABLES PROVIDE HALL CAN COMMUNICATION & POWER (24VDC/GND) TO EACH P-HALL BOARD.

P-HALL BOARD INTERCONNECTIONS

JOB NAME: **215 PEARL STREET (R1 & R2)**

CUSTOMER: **G-TECH ASSOCIATES, LLC.**

ENGINEERED BY: Jason Kirlis | DATE: 07/14/17 | REVISION DATE:

ELEVATOR CONTROLS
6150 WAREHOUSE WAY
SACRAMENTO, CA 95826 USA
PHONE:(800)829-8106 FAX:(916)428-1728
www.elevatorcontrols.com

CONTROLLER MODEL: PIXEL AC VECTOR-GL-L2

JOB NUMBER: 17-19017

CONTROLLER ID: A & B | PAGE NUMBER: 9

M_PIXEL-9.dwg | 03/26/16
FILE: J19017_9.dwg

9Z

PAGE 5Z
HR1

RJ45 TERMINATION	
PIN	WIRE COLOR
1 (CAN1+)	WHITE/ORANGE
2 (CAN1−)	ORANGE
3 (V−)	WHITE/GREEN
4 (N/C)	BLUE
5 (N/C)	WHITE/BLUE
6 (V−)	GREEN
7 (V+)	WHITE/BROWN
8 (V+)	BROWN

STANDARD 568-B WIRING

PORT FRONT VIEW

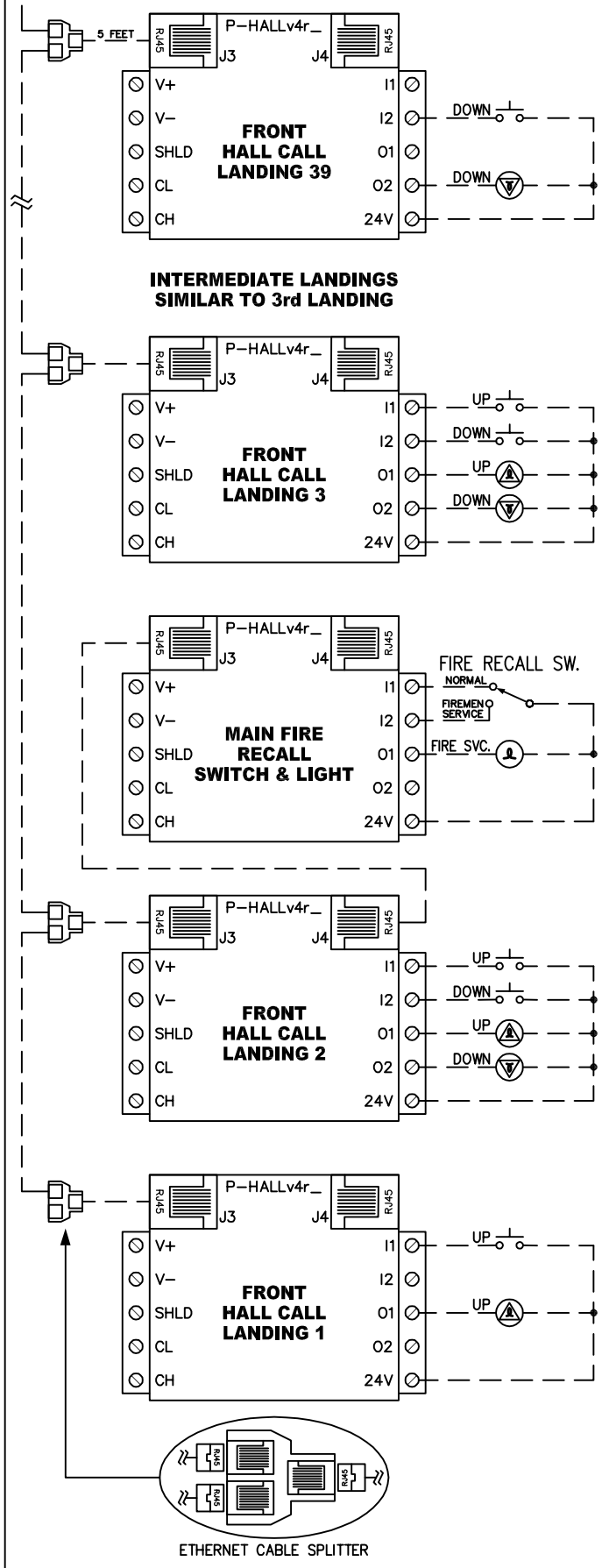

2 EPI CONTACT IS OPEN FOR NORMAL POWER & CLOSED FOR EMERGENCY POWER

HALL NODE BOARD INSTALLATION INSTRUCTIONS:

ALL SERIAL HALL FIXTURES MUST BE RATED 24VDC/0.5A MAX. PEAK/0.2A MAX. CONTINUOUS.

ALL HALL CAN COMMUNICATION CABLES ARE CAT5e TERMINATED WITH RJ45 CONNECTOR AND WIRED TO 568−B STANDARDS

1. CONNECT THE HALL CALL FIXTURE TO THE P−HALL BOARD I/O AS SHOWN IN THE EXAMPLE ABOVE.
2. CONFIGURE THE P−HALL BOARD DIP SWITCH SETTINGS FOR THE CORRESPONDING HALL CALL FIXTURE (P−HALL BOARD CONFIGURATION REFERENCE TABLE IS LOCATED ON PAGE QR4Z).
3. USING HALL CAN CABLES AND SPLITTERS TO INTERCONNECT THE P−HALL BOARDS AS SHOWN IN THE EXAMPLE ABOVE, THESE CABLES PROVIDE HALL CAN COMMUNICATION & POWER (24VDC/GND) TO EACH P−HALL BOARD.

P−HALL BOARD INTERCONNECTIONS

JOB NAME: **215 PEARL STREET (R1 & R2)**

CUSTOMER: **G-TECH ASSOCIATES, LLC.**

ENGINEERED BY: Jason Kirlis | DATE: 07/14/17 | REVISION DATE: 03/24/2017 JPK

ELEVATOR CONTROLS
6150 WAREHOUSE WAY
SACRAMENTO, CA 95826 USA
PHONE: (800)829−8106 FAX: (916)428−1728
www.elevatorcontrols.com

CONTROLLER MODEL: PIXEL AC VECTOR-GL-L2

JOB NUMBER: 17−19017

CONTROLLER ID: A | PAGE NUMBER: 9Z

M_PIXEL−9.dwg 03/24/16

FILE: J19017−A_9Z.dwg

RELAY CONTACT COUNT

RELAY NAME:	RELAY DESCRIPTION:	RELAY TYPE:	COIL AREA:	RELAY POLE NUMBER: 1 NO/NC	2 NO/NC	3 NO/NC	4 NO/NC	5 NO/NC	6 NO/NC	7 NO/NC	8 NO/NC
AA	MOTOR CONTACTOR	3	4	1	1	1	1	4	4	1	4
BH	BRAKE HOLD	32	4	2	2						
BHA	BRAKE HOLD (EMERGENCY BRAKE)	14	5b	2	2						
BK	BRAKE ENABLE	31	4	2	2		4				
BK2	BRAKE ENABLE #2	16	4	2	2						
EB1	EMERGENCY BRAKE 1	32	3	2	2						
EB2	EMERGENCY BRAKE 2	32	3	2	2						
EBK	EMERGENCY BRAKE	33	2	2	2						
EBX1	EMERGENCY BRAKE AUX. 1	32	3	2	2						
EBX2	EMERGENCY BRAKE AUX. 2	32	3	2	2						
LTO	CAB LIGHT & FAN CONTROL TOC	14	6	6	6						
P	RUN ENABLE	31	4	2	2	4	4				
RUN	DRIVE ON SIGNAL	32	4	2	2						

PIXEL BOARD NAMES

NAME:	BOARD DESCRIPTION:	EC PART #:
P-PDB	PIXEL POWER DISTRIBUTION BOARD	17-002-129
P-MP	PIXEL MAIN MICROPROCESSOR BOARD	17-002-123
P-MP-IO	PIXEL MAIN MICROPROCESSOR I/O BOARD	17-002-124
P-TOC	PIXEL TOP OF CAR MICROPROCESSOR BOARD	17-002-121
P-COP	PIXEL CAR OPERATING PANEL MICROPROCESSOR BOARD	17-002-119
P-HALL	PIXEL HALL NODE BOARD	17-002-114
P-TB-M	PIXEL TERMINAL BOARD MACHINE ROOM CONNECTIONS	17-002-137
P-TB-C	PIXEL TERMINAL BOARD CARTOP CONNECTIONS	17-002-138
P-TB-H	PIXEL TERMINAL BOARD HOISTWAY CONNECTIONS	17-002-139
P-CNEX	PIXEL EXPANSION I/O BOARD CAN BUS	17-002-116
P-MP-RDOOR	PIXEL P-MP REAR DOOR I/O EXTENDER BOARD	17-002-128
P-HNA	PIXEL HALL NETWORK ADAPTER BOARD	17-002-135

NOTE: AA #4-#8 CONTACTS ARE AUXILARY CONTACTS
P #5 CONTACT IS A AUXILARY CONTACT

RELAY TYPES

#:	MANUFACTURER PART #:	EC PART #:	
1	RUS4S-CD-110 4PDT 110VDC	04-001-001	
2	TRN/D-O 311 2PDT 110VAC/DC	-	
3	C-H XTCE080F00A	12-020-049A	CAR A ONLY
3	C-H XTCE095F00A	12-020-050A	CAR B ONLY
4	RU4S-CA-110 4PDT 120VAC	04-001-005	
5	PM17DY-110 4PDT 110VDC	04-002-001	
6	PRD-11DHO-1102PDT 110VDC	04-002-002	
7	KUP-14D35-1103PDT 110VDC	04-001-002	
8	KUP-14A35-1203PDT 120VAC	04-001-006	
9	PM17AY120 4PDT 120VAC	-	
10	DS2-M-DC48 2PDT 48VDC	-	
11	DS2-ML-DC48 2PDT 48VDC(L)	-	
12	DS2-M-DC12 2PDT 12VDC	-	
13	DS2-ML-DC12 2PDT 12VDC(L)	04-001-009	
14	KUP-14D15-24 3PDT 24VDC	04-001-016	
15	PT-570-512 4PDT 12VAC	04-001-014	
16	PRD-11AHO-120 2PDT 120VAC	04-002-003	
17	PT-570-048 4PDT 48VDC	04-001-015	
18	PT-570-024 4PDT 24VDC	04-001-003	
19	RU4S-A24 4PDT 24VAC	04-001-017	
20	REVERSE PHASE RELAY	-	
21	EHDB220C-1L 600V 220A 120VAC COIL	12-008-006A	
22	KUP-14A35-240 3PDT 240VAC	04-001-008	
23	CNS-35-92 TIMER 2PDT	04-005-002	
24	EC-100-C TIMER	-	
25	V23049-B1012-A122 4P 110VDC	-	
26	V23050-A1110-A533 6P 110VDC	04-006-002	
27	G5V2 DC48 2PDT	04-001-011	
28	CA7-16C-01-110D CONTACTOR	-	
29	PT-570-512 4PDT 12VAC	04-001-014	
30	CA7-16-01 120VDC COIL	12-020-023	
31	CA8-09-01-120 120VAC COIL	12-020-031	
32	K10P-11A15-120 120VAC COIL 10A@277VAC	04-001-020	
33	PRD-11AHO-240 2PDT 240VAC	04-002-005	
34	G5V2 DC12 2PDT	04-001-010	
35	-	-	
36	-	-	

SCHEMATIC SYMBOLS

STANDARD — FGR (FORCE GUIDED)

- RELAY COIL
- NORMALLY OPEN CONTACT
- NORMALLY CLOSED CONTACT

(NUMBER INDICATES POLE AND FIXED CONTACT)

- EC INTERNAL CONTROLLER WIRING
- PC BOARD TRACE
- FIELD WIRING (BY CUSTOMER)
- HARNESS (IDC) TERMINAL
- SCREW TERMINAL PCB MOUNTED
- PANEL MOUNT SCREW TERMINAL
- HIGH POWER TERMINAL BLOCKS
- MP — MICROPROCESSOR OUTPUT
- SP1 — SAFETY MICROPROCESSOR OUTPUT
- SP2 — SAFETY F.P.G.A .OUTPUT
- Q_ — OUTPUT W/ REPLACEABLE TRANSISTOR
- MP — MICROPROCESSOR INPUT
- SP1 — SAFETY MICROPROCESSOR INPUT
- SP2 — SAFETY F.P.G.A. INPUT
- FUSE (DOT INDICATES TOP OF FUSE)
- RESISTOR
- RESISTOR WITH ADJUSTABLE TAP (DOT INDICATES TOP OR LEFT AS INSTALLED)
- DIODE
- ZENER DIODE
- LED
- AC RATED CAPACITOR
- NON POLAR CAPACITOR
- POLAR CAPACITOR
- MOV (VOLTAGE TRANSIENT SUPPRESSOR)
- AC — DIODE BRIDGE
- OFF OR ON — PC BOARD SLIDE JUMPER ON/OFF; JUMPED POSITION
- ON — PC BOARD DIP SWITCH (9 POSITION); 1 2 3 4 5 6 7 8 9; OFF POSITION; ON POSITION
- GROUND (EARTH GROUND)
- MECHANICAL OPERATED CAM SWITCH
- VANE SWITCH
- DMO — DRIVING MACHINE OPERATED SWITCH

TYPE KHU POLE ASSIGNMENT (EXT. SOCKET)

1 2 3 4 — OPEN — CLOSED — COIL — COMMON

TYPE KUP POLE ASSIGNMENT (EXT. SOCKET)

1 2 3 — OPEN — CLOSED — COIL — COMMON

TYPE PRD POLE ASSIGNMENT

1 2 — CLOSED — OPEN — COIL — COMMON

CONTACT COUNT & NOMENCLATURE

JOB NAME: **215 PEARL STREET (R1 & R2)**

CUSTOMER: **G-TECH ASSOCIATES, LLC.**

ENGINEERED BY: Jason Kirlis — DATE: 07/14/17 — REVISION DATE:

ELEVATOR CONTROLS
6150 WAREHOUSE WAY
SACRAMENTO, CA 95826 USA
PHONE: (800)829-8106 FAX: (916)428-1728
www.elevatorcontrols.com

CONTROLLER MODEL: PIXEL AC VECTOR-GL-L2

JOB NUMBER: 17-19017

CONTROLLER ID: A & B — PAGE NUMBER: 10

M_PIXEL-10.dwg 01/10/17
FILE: J19017_10.dwg

HOISTWAY TERMINALS

(1) 17-002-139v03 PIXEL TERMINAL BLOCK BOARD - HOISTWAY (P-TB-H)

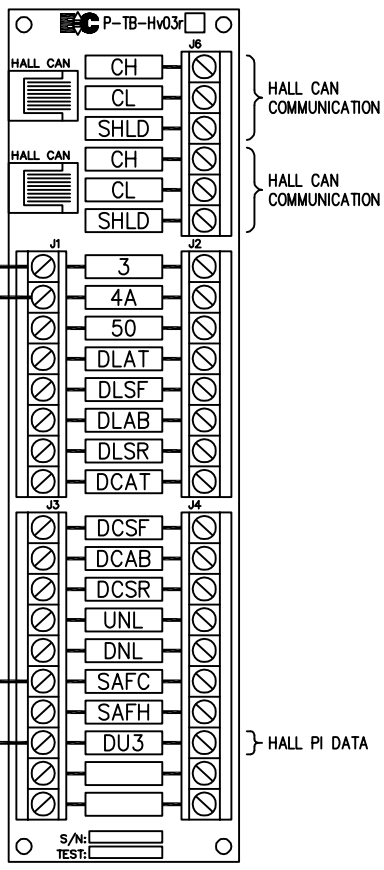

MACHINE ROOM TERMINALS

(1) 17-002-137v02 PIXEL TERMINAL BLOCK BOARD - MACHINE ROOM (P-TB-M)
(4) 10-203-005 BEIGE PANEL MOUNT TERMINAL BLOCKS

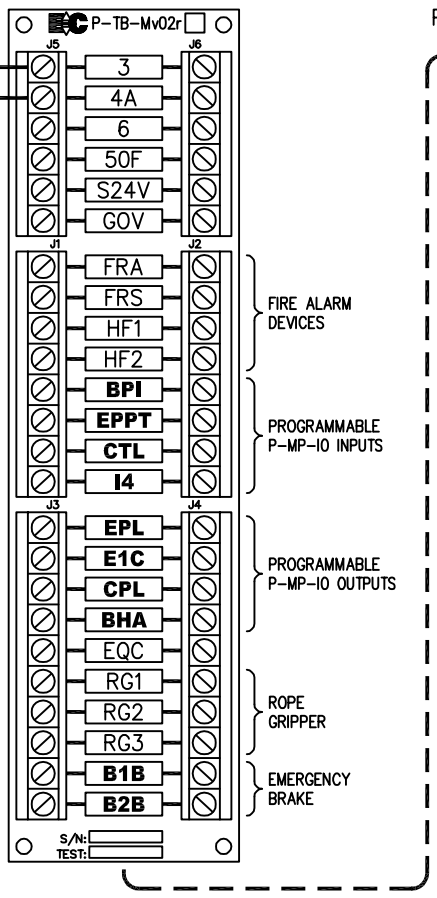

PANEL MOUNT TERMINALS BELOW P-TB-M BOARD

B1	⊘		⊘	B1	MAIN BRAKE
B2	⊘		⊘	B2	
EPTC	⊘		⊘	EPTC	SHUTDOWN
GVT	⊘		⊘	GVT	GOVERNOR SHEAVE TENSION

CARTOP TERMINALS FOR TRAVELER CABLE

(1) 17-002-138v03 PIXEL TERMINAL BLOCK BOARD - CARTOP (P-TB-C)
(12) 10-203-005 BEIGE PANEL MOUNT TERMINAL BLOCKS

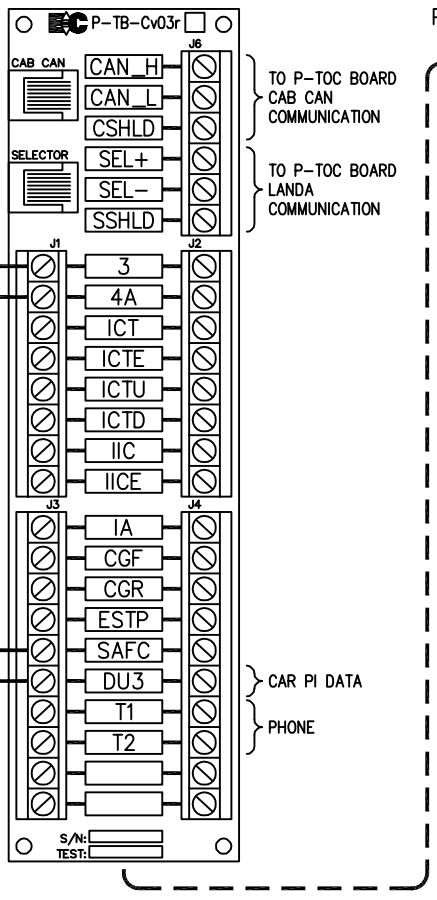

PANEL MOUNT TERMINALS BELOW P-TB-C BOARD

TOC1	⊘		⊘	TOC1	TOC POWER
TOC2	⊘		⊘	TOC2	
WHT	⊘		⊘	WHT	CAB POWER (115VAC)
BLK	⊘		⊘	BLK	
GRN	⊘		⊘	GRN	
	⊘		⊘		
BPIX	⊘		⊘	BPIX	
21A	⊘		⊘	21A	
21B	⊘		⊘	21B	
21C	⊘		⊘	21C	
21D	⊘		⊘	21D	
22	⊘		⊘	22	

RESISTOR BOX TERMINALS IN MAIN CONTROLLER

(5) 10-203-005 BEIGE PANEL MOUNT TERMINAL BLOCKS
(2) 10-201-012 POWER TERMINAL BLOCK 600V 175A 2 POLE

RBP1	⊘		⊘	RBP1
RBP2	⊘		⊘	RBP2
EBH	⊘		⊘	EBH
FN1	⊘		⊘	FN1
FN2	⊘		⊘	FN2

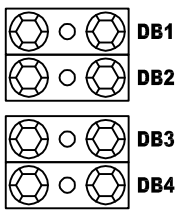

TERMINALS IN MAIN CONTROLLER

(0) 10-203-005 BEIGE PANEL MOUNT TERMINAL BLOCKS

TOC (TOP OF CAR) BOX TERMINALS

(1) 17-002-137v02 PIXEL TERMINAL BLOCK BOARD (P-TB-M)
(12) 10-203-005 BEIGE PANEL MOUNT TERMINAL BLOCKS

3	⊘		⊘	3
4A	⊘		⊘	4A
TOC1	⊘		⊘	TOC1
TOC2	⊘		⊘	TOC2
GND	⊘		⊘	GND
WHT	⊘		⊘	WHT
BLK	⊘		⊘	BLK
GRY	⊘		⊘	GRY
GRN	⊘		⊘	GRN
GND	⊘		⊘	GND
DPF1	⊘		⊘	DPF1
DPF2	⊘		⊘	DPF2

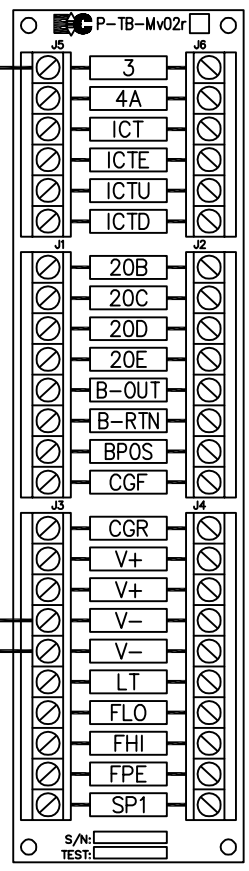

PIXEL CONTROLLER TERMINAL LABELS & ORDER

JOB NAME: **215 PEARL STREET (R1 & R2)**

CUSTOMER: **G-TECH ASSOCIATES, LLC.**

ENGINEERED BY: Jason Kirlis | DATE: 07/14/17 | REVISION DATE:

ELEVATOR CONTROLS
6150 WAREHOUSE WAY
SACRAMENTO, CA 95826 USA
PHONE: (800)829-8106 FAX: (916)428-1728
www.elevatorcontrols.com

CONTROLLER MODEL: PIXEL AC VECTOR-GL-L2

JOB NUMBER: 17-19017

CONTROLLER ID: A & B | PAGE NUMBER: TS

M_PIXEL-TS.dwg 03/24/16
FILE: J19017_TS.dwg